2026 RETAIL Price Book

Effective Date 06/02/2026

**Adjustments made to select SKU's after effective date, see next page for detail*

Wood Chimney	**Page**
Excel 103HT Class A Chimney	3-10
R.I.S. Chimney	11-16
Ultrablack Double Wall Stove Pipe ***7" NON-STOCK WITH EXTENDED LEAD TIMES***	17
Excel Prime Black Stove Pipe ***7" NON-STOCK - MADE TO ORDER***	18-19
Pellet Venting	
Excel Pellet Venting	20-23
Wood Liner	
Excel Rigid Liner	24-25
Gas Venting	
Excel Direct Vent	26-30
Excel Direct Power Vent **(Currently Approved for Ortal & Urbana Fireplaces)**	31-33
Excel Direct Power Vent Required Components Guide - **for Ortal Fireplaces**	34-35
Excel Direct Power Vent vs. CVS (Duravent) - "Compare Components" List	36

EXCEL POWER VENT ADVANTAGE:

- **CURRENTLY APPROVED FOR ORTAL & URBANA** *(pending w/other top fireplace manufacturers)*
- **Listed to 550 Degrees F** *(higher than other brands)*
- **Tightest Seals on the Market**
- **Locking Bands for "Rigid Pipe"** *(allows for longer venting runs)*
- **No Twist-Lock** - Adjust Pipe and Fittings as Needed
- **Clean Assembly** - NO Lubricants on Pipe or Components for Mess-Free

Special Notes or Adjustments

06/09/2026

The following SKU's **(16-24" RIS Lengths)** *required a price adjustment after the initial increase was put in place on 6/2/2026. These have been updated in price book.*

SKU	Description	Retail as of 06/09
ICRC16RIL1	16" x 12" S/S RIS Length	$516.00
ICRC16RIL18	16" x 18" S/S RIS Length	$682.00
ICRC16RIL2	16" x 24" S/S RIS Length	$807.00
ICRC16RIL4	16" x 48" S/S RIS Length	$1,289.00
ICRC16RILA1	16" x 12" S/S RIS Adj. Length	$722.00
ICRC16RILA2	16" x 24" S/S RIS Adj. Length	$1,128.00
ICRC18RIL1	18" x 12" S/S RIS Length	$728.00
ICRC18RIL18	18" x 18" S/S RIS Length	$987.00
ICRC18RIL18G	18" x 18" Galvalume RIS Length	$821.00
ICRC18RIL1G	18" x 12" Galvalume RIS Length	$618.00
ICRC18RIL2	18" x 24" S/S RIS Length	$1,209.00
ICRC18RIL2G	18" x 24" Galvalume RIS Length	$984.00
ICRC18RIL4	18" x 48" S/S RIS Length	$2,063.00
ICRC18RIL4G	18" x 48" Galvalume RIS Length	$1,619.00
ICRC18RILA1	18" x 12" S/S RIS Adj. Length	$1,018.00
ICRC18RILA1G	18" x 12" Galvalume RIS Adj. Length	$866.00
ICRC18RILA2	18" x 24" S/S RIS Adj. Length	$1,694.00
ICRC18RILA2G	18" x 24" Galvalume RIS Adj. Length	$1,375.00
ICRC20RIL1	20" x 12" S/S RIS Length	$816.00
ICRC20RIL18	20" x 18" S/S RIS Length	$1,103.00
ICRC20RIL18G	20" x 18" Galvalume RIS Length	$917.00
ICRC20RIL1G	20" x 12" Galvalume RIS Length	$695.00
ICRC20RIL2	20" x 24" S/S RIS Length	$1,345.00
ICRC20RIL2G	20" x 24" Galvalume RIS Length	$1,097.00
ICRC20RIL4	20" x 48" S/S RIS Length	$2,297.00
ICRC20RIL4G	20" x 48" Galvalume RIS Length	$1,804.00
ICRC20RILA1	20" x 12" S/S RIS Adj. Length	$1,142.00
ICRC20RILA1G	20" x 12" Galvalume RIS Adj. Length	$971.00
ICRC20RILA2	20" x 24" S/S RIS Adj. Length	$1,883.00
ICRC20RILA2G	20" x 24" Galvalume RIS Adj. Length	$1,539.00
ICRC22RIL1	22" x 12" S/S RIS Length	$883.00
ICRC22RIL18	22" x 18" S/S RIS Length	$1,220.00
ICRC22RIL18G	22" x 18" Galvalume RIS Length	$1,007.00
ICRC22RIL1G	22" x 12" Galvalume RIS Length	$751.00
ICRC22RIL2	22" x 24" S/S RIS Length	$1,478.00
ICRC22RIL2G	22" x 24" Galvalume RIS Length	$1,209.00
ICRC22RIL4	22" x 48" S/S RIS Length	$2,539.00
ICRC22RIL4G	22" x 48" Galvalume RIS Length	$2,001.00
ICRC22RILA1	22" x 12" S/S RIS Adj. Length	$1,235.00
ICRC22RILA1G	22" x 12" Galvalume RIS Adj. Length	$1,049.00
ICRC22RILA2	22" x 24" S/S RIS Adj. Length	$2,066.00
ICRC22RILA2G	22" x 24" Galvalume RIS Adj. Length	$1,694.00
ICRC24RIL1	24" x 12" S/S RIS Length	$944.00
ICRC24RIL18	24" x 18" S/S RIS Length	$1,292.00
ICRC24RIL18G	24" x 18" Galvalume RIS Length	$1,077.00
ICRC24RIL1G	24" x 12" Galvalume RIS Length	$798.00
ICRC24RIL2	24" x 24" S/S RIS Length	$1,581.00
ICRC24RIL2G	24" x 24" Galvalume RIS Length	$1,292.00
ICRC24RIL4	24" x 48" S/S RIS Length	$2,728.00
ICRC24RIL4G	24" x 48" Galvalume RIS Length	$2,142.00
ICRC24RILA1	24" x 12" S/S RIS Adj. Length	$1,323.00
ICRC24RILA1G	24" x 12" Galvalume RIS Adj. Length	$1,117.00
ICRC24RILA2	24" x 24" S/S RIS Adj. Length	$2,218.00
ICRC24RILA2G	24" x 24" Galvalume RIS Adj. Length	$1,807.00

06/29/2026

The following SKU's required a price adjustment after the initial increase was put in place on 6/2/2026. These have been updated in price book.

SKU	Description	Retail as of 06/29
ICLE5LEA90	5" x 90 Degree Adj. Elbow	$202.00
ICLE6LEA90	6" x 90 Degree Adj. Elbow	$215.00
ICLE7LEA90	7" x 90 Degree Adj. Elbow	$230.00
ICLE8LEA90	8" x 90 Degree Adj. Elbow	$259.00
ICLM6LAF90	6" x 90 Degree Adj. Flex Adapter S/S Liner	$215.00
ICRM10RAPD	RIS 10" Anchor Plate w/ Damper	$921.00
ICRM12RAPD	RIS 12" Anchor Plate w/ Damper	$956.00
ICRM14RAPD	RIS 14" Anchor Plate w/ Damper	$1,140.00
ICRM16RAPD	RIS 16" Anchor Plate w/ Damper	$1,284.00
ICRM18RAPD	RIS 18" Anchor Plate w/ Damper	$1,541.00
ICRM20RAPD	RIS 20" Anchor Plate w/ Damper	$1,797.00
ICRM22RAPD	RIS 22" Anchor Plate w/ Damper	$2,053.00
ICRM24RAPD	RIS 24" Anchor Plate w/ Damper	$2,317.00
ICSE6SWA90	24 GA 6" 90° Adjustable Elbow	$240.00
ICSE7SWA90	24 GA 7" 90° Adjustable Elbow	$247.00
ICTX35DPR43DP	3/5 DV Power Vent Adapter 4/6.5 to 3/5	$257.00
ICTX35DPR53DP	3/5 DV Power Vent Adapter 5/8 to 3/5	$273.00
ICXMESCX	Universal Storm Collar for 6" - 8" Flash-ings. (New 3.75" Wide Design)	$52.00
ICXMESQSCX	Universal Excel Square Support Storm Collar For 6" - 8" (5.25" Wide Lip)	$66.00
ICXM7EDRCSS	7" Deluxe Rain Cap W/Screen (CA ONLY)	$273.00
ICXM8EDRCSS	8" Deluxe Rain Cap W/Screen (CA ONLY)	$326.00

Industrial Chimney Company

Excel 103HT Insulated Class A Chimney

Excel Chimney is the only chimney sold in the U.S.A. that meets the more stringent Canadian 30 minute chimney fire test. This means that with Excel, your customers are getting the safest chimney on the market.

There are no couplings on the ends of Excel 103HT. Eliminating the coupling also eliminates the thermal bridge between the flue and the casing. With Excel 103HT, the insulation runs continuously from section to section. As a result, there are no hot spots.

With the continuous weld of Excel 103HT, there are only two thicknesses of materials, and only 1/4" of overlap. This allows the flue to expand and contract uniformly around its circumference. The continuous weld on Excel 103HT is totally watertight, eliminating a potential source of chimney corrosion.

Excel 103HT "Smart Parts" make it the easiest chimney system available to install and inventory. 6" Excel 103HT only requires a 10" hole in the ceiling when used with its round or square support. Most brands require a 12" hole. Since roof trusses and floor joists rarely line up with the desired chimney location, a smaller support almost always makes the installation easier.

Excel 103HT is the first insulated chimney to offer adjustable lengths. Adjustable lengths relieve many installation headaches by allowing unlimited center-to-center offsets, easy balancing of cap heights and painless overall length adjustment.

Adjustable wall supports allow for variations in wall finish, virtually eliminating bracing and blocking. The Excel 103HT wall support installs above the insulated tee which virtually allows it to be screwed to the framing instead of anchored into concrete. Excel roof supports, wall supports, offset supports and roof braces adjust to fit 6, 7 and 8 inch chimney.

Excel is protected by a comprehensive lifetime warranty. The warranty provides for full replacement of any chimney lengths damaged as a result of normal wood stove or fireplace operation (including chimney fires) for a period of ten years from the date of installation. See installation guide for details.

Industrial Chimney Company manufactures product from 5" up to 24" inner diameter. For pricing and availability, call AES Inside Sales.

Industrial Chimney Company

Excel 103HT Insulated Class A Chimney

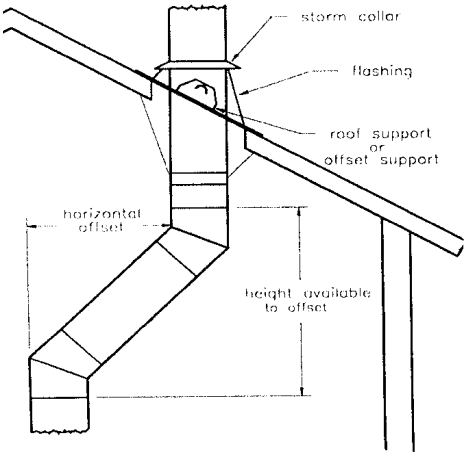

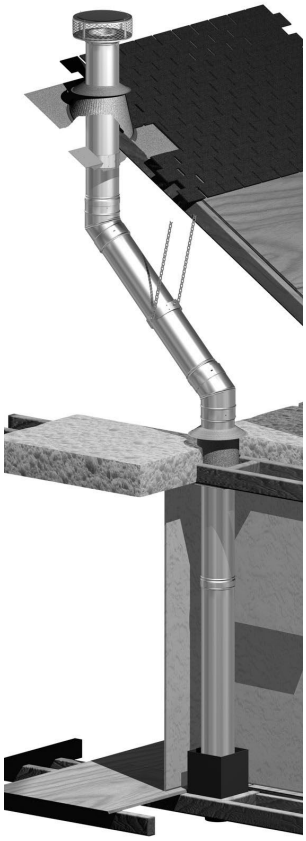

Typical Offset, Two Story Installation

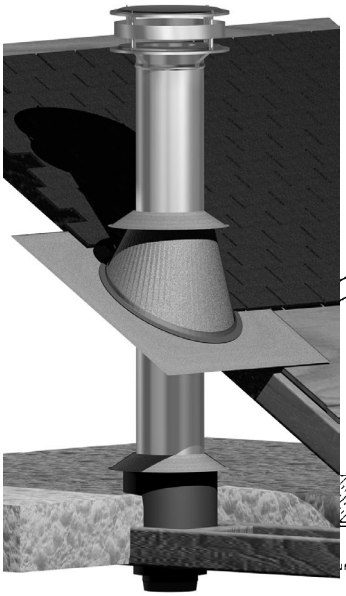

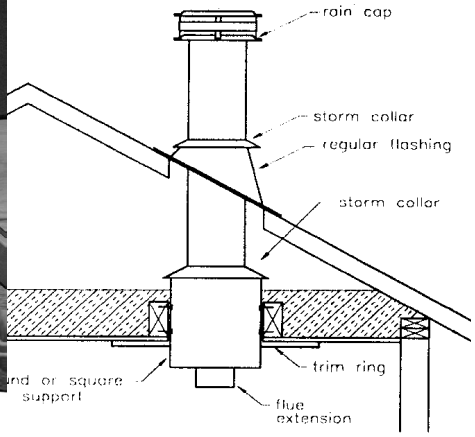

Typical Main Floor Installation

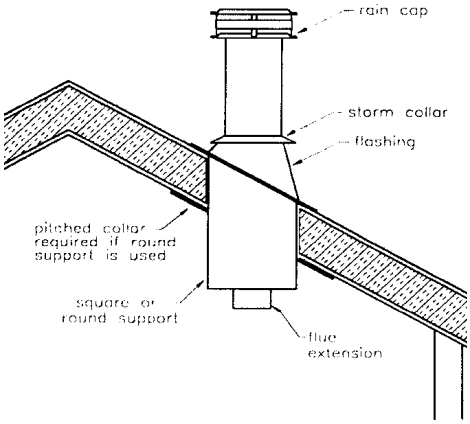

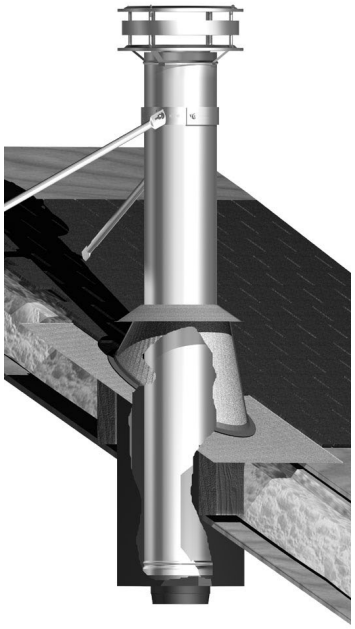

Typical Cathedral Installation

Industrial Chimney Company

Excel 103HT Insulated Class A Chimney

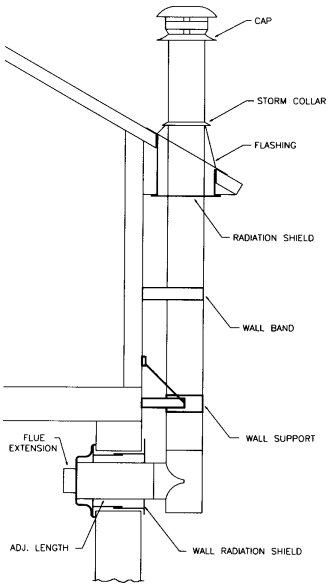

Typical Through-Wall Installation

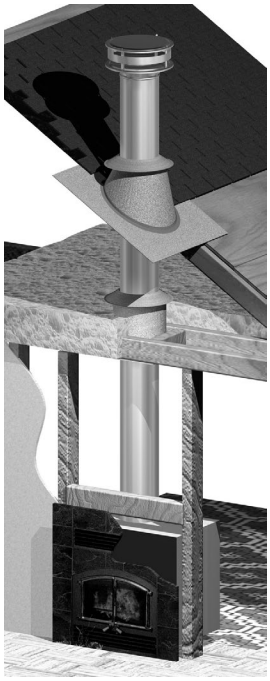

Typical Zero-Clearance Installation

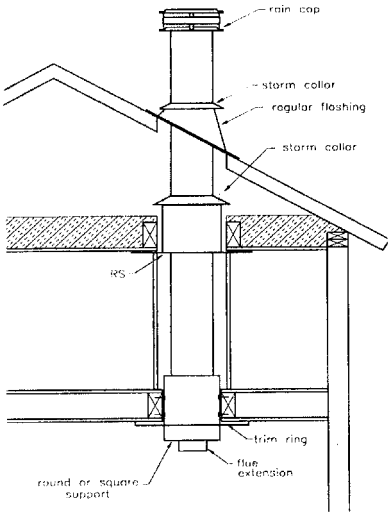

Typical Interior 2-story Free-standing Installation

Insulated Lengths

Excel chimney sections are available in 48", 24", 18", 12" and 6" lengths as well as an 18" adjustable length. This unique part enables an installer to adjust the system to the exact overall length required for any installation. The most common applications are between elbows to achieve any required center-to-center offset. This balances the chimney height when necessary so that the caps line up for functional or aesthetic reasons. Also used when a specific horizontal offset is required. The adjustable length must be installed above a straight chimney section. It will not adjust into an elbow or tee.

Adjustable Length

Tee

The insulated tee may be used on the interior or exterior of the building and in combination with a wall support assembly. Tee cap has a handle on the bottom to simplify removal for cleaning.

Tee

Elbows

Excel elbows are available in 15, 30 and 45 degrees. All Excel elbows are tested and listed to the UL 103HT and ULC S629 standards. Please consult your local inspector before using 45 degree elbows.

Round and Square Supports

Excel 103HT ceiling supports are suitable for use on all flat or sloping ceilings. They must project into the room a minimum of 3 inches on a flat ceiling. These supports are designed to act as a combination of support and attic radiation shield. To use either support as an attic radiation shield, simply close the open area at the top of the support (in the attic) with a storm collar. The trim collars are separate from the supports allowing for easy installation before or after the ceiling finish is applied. Square supports include a black end cap and trim ring.

Elbow

Support Extensions

Support extensions are available to facilitate installations on very steep pitched ceilings or where the chimney must project unusually far into the room. Both the round and square support extensions are 24" long.

Square Support

Flue Extension

The flue extension fastens to the bottom of the first chimney section with three screws making it

Industrial Chimney Company

Excel 103HT Insulated Class A Chimney

Wall Radiation Shield

The wall radiation shield is used when the chimney passes horizontally through a combustible wall. The WRS telescopes to adjust for wall thickness, so no painting is required. The inside trim collar is separate from the WRS, allowing for easy installation before or after the wall finish is applied. Includes a flue extension and trim ring.

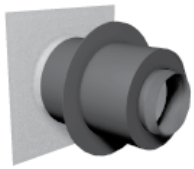

Wall Radiation Shield

Wall Support/Wall Band

The wall support is used to support the vertical chimney on a through-the-wall installation. It installs on the first section of the chimney above the tee (not on the tee itself) thus making it easier to fasten the support to framing instead of into concrete. It is a universal design made to slide in and out to fit a variety of wall profiles. An Extended Wall Support is available (in place of the standard Wall Support) for installations requiring added extension flexibility.

Wall Band

Trim Rings

Used to finish round supports. Chimney Trim Rings are used to finish chimney pipe with no support.

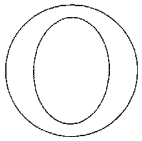

Trim Ring

Locking Band

All Excel 103HT insulated components are designed to be fastened together with the stainless steel screws provided with each part. In some cases, it may be desirable to install a locking band. The locking band is designed to overlap the two beads immediately above and below the chimney joint and fasten with a 1/4" bolt.

Wall Channel

The wall channel enables a wall support or wall band to be fastened solidly to the framing when the framing centers don't line up with the chimney opening. The wall channel is 24" long.

Roof Support

The roof support is primarily used when it is difficult to use a round or square support in a cathedral ceiling. It can also be used above an offset or to provide additional support when the chimney height exceeds the capacity of the primary support. The roof support utilizes a universal band and is made with adjustable brackets allowing it to adjust easily to any roof pitch.

Roof Support

Offset Support

The offset support is primarily used to re-support the chimney above an offset, however it may also be used to provide additional support when the chimney height exceeds the capacity of the primary support. The offset support straps are 24" long.

Roof Brace

The roof brace is used to provide lateral support for a chimney which extends more than 5 feet above a roof. The roof brace utilizes a universal band to fit 6, 7 and 8 inch chimneys. The arms on the roof brace telescope from 5 feet to 10 feet long.

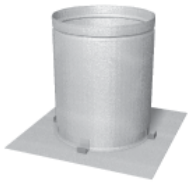

Radiation Shield

Radiation Shield

The radiation shield is used to protect combustible framing in the floor or ceiling adjacent to the chimney. It serves as a firestop spacer to prevent a fire from traveling through the opening between the chimney and the framing. Use the Insulated Radiation Shield for energy efficient construction.

Chimney Top Damper

Adding this “Top Damper” to a system seals it right at the top of the chimney. The “Chimney Top Damper” is placed directly below the cap and is designed to prevent any cold air infiltration into the

Chimney Top

Industrial Chimney Company

Excel 103HT Insulated Class A Chimney

Anchor Plate
The anchor plate is used to fasten an Excel chimney system to a masonry fireplace or extend an existing masonry chimney.

Snow Wedge
Protects from heavy snow load. Fasten to plywood or backing with a minimum of 8 screws. Tabs on wedge are adjustable from 4/12 roof pitch up to 12/12.

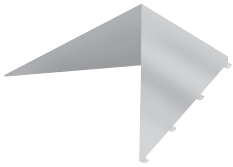
Snow Wedge

Rain Cap
Excel rain caps are made entirely of stainless steel. The dome is designed to shed rain and debris, while optimizing draft. Excel chimneys must be installed with an Excel rain cap. The deluxe cap also has a skirt to deflect wind and a stainless steel band to reduce the entry of driving rain. An optional spark screen is available to help arrest sparks in installations where they may pose a safety problem. The rain cap is very easy to install and to remove for cleaning and is held in place by four screws through the tabs provided into the chimney.

Regular Rain Cap

Revolving Rain Cap
The revolving rain cap helps to prevent the entry of wind driven rain and helps to prevent wind induced downdrafts.

Deluxe Rain Cap
The deluxe cap is made from .025" thick type 304 stainless steel and carries a lifetime 100% full replacement warranty.

Rain Cap Base
The bottom portion only of the rain cap to allow for a custom chimney top termination.

Spark Screen
Used in conjunction with a rain cap for spark protection.

Revolving Rain Cap

Decorative Caps - Round & Square
The decorative caps are designed to simulate terra cotta chimney pots for superior aesthetics when terminating a site fabricated chase. They can also be used to terminate a chimney liner in a masonry chimney. A decorative cap flashing is required. NOTE: The installation requirements for these caps are quite specific and should be reviewed before constructing the chase.

Flexible Base Flashing
The flexible base flashing combines a stainless steel cone with a flexible lead base which can be easily formed on site to match virtually any roof profile. It was designed for masonry tile roofs but can be used wherever a flexible base is required.

Decorative Caps

Decorative Cap Flashing
The decorative cap flashing is made from galvalume steel only and is required with the decorative cap.

Flashings
Standard flashings are available in a variety of configurations to suit various chimney diameters, roof slopes and installation types. Ventilated flashings are intended for mobile home use and for installations where the chimney is enclosed in the attic. All flashings include a collar.

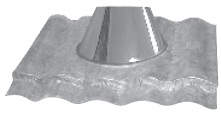
Flexible Base Flashing

Metal Roof Flashings
Metal roof flashings are designed to be easily installed on most metal roof profiles. These flashings are offered in a variety of configurations to suit most roof slopes. Offered in galval-

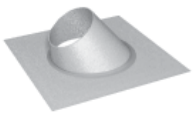
Flat Flashing

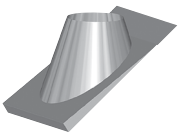
Metal Roof Flashing

Peak Flashing

Industrial Chimney Company

Excel 103HT Insulated Class A Chimney

Stainless Steel EXCEL Insulated Lengths					
For stock status, please visit order.aes4home.com or call 800-682-9722					
Item No.	Description	5"	6"	7"	8"
ICXC__EL6	6" Length	$174.00	$194.00	$232.00	$286.00
ICXC__EL12	12" Length	187.00*	207.00	248.00	302.00
ICXC__EL18	18" Length	219.00*	241.00	286.00	347.00
ICXC__ELA18	18" Adjustable Length	297.00*	331.00	410.00	480.00
ICXC__EL24	24" Length	297.00*	331.00	410.00	480.00
ICXC__EL36	36" Length	428.00	473.00	563.00	687.00
ICXC__EL48	48" Length	507.00	563.00	725.00	849.00
Stainless Steel Tees and Elbows					
ICXE__ETI	Insulated Tee w/Cap	$543.00*	$603.00	$774.00	$885.00
ICXE__EITC	Insulated Tee Cap (optional)	153.00*	171.00*	189.00*	205.00*
ICXE__EE15	15° Elbow	284.00*	315.00	360.00	430.00
ICXE__EE30	30° Elbow	414.00*	459.00	480.00	549.00
ICXE__EE45	45° Elbow (Approved for Canada Only)	439.00	489.00	538.00	597.00
Caps					
ICXM__ERC	Regular Rain Cap	$167.00*	$169.00	$187.00	$219.00
ICXM__EDRC	Deluxe Rain Cap	-	219.00	273.00	340.00
ICXM__ERCB	Rain Cap Base	-	50.00	54.00	59.00
ICXM__ERRC	Revolving Rain Cap (Add ICXMERCS if Sparkscreen is desired)	-	556.00	556.00	556.00
ICXM__EDRCSS	Deluxe Rain Cap w/Screen (Stocked in CA)	-	273.00	273.00	326.00
ICXM__ERCSS	Regular Rain Cap w/Screen (Stocked in CA)	-	210.00	228.00	246.00
ICXMERCS	Spark Screen - Stainless Steel (Adjustable 5" - 8")	54.00			
ICXMERCW	Wind Shield	129.00			
Supports					
ICXM__ERDS	Round Support	$273.00*	$291.00	$297.00	$306.00
ICXM__ERDSI	Insulated Round Support	-	498.00	527.00*	556.00
ICXM__ES	Galvanized Ceiling Support	180.00*	180.00*	192.00*	212.00*
ICXM__ESS	Square Support Box	-	306.00	311.00	322.00
ICXM6ESS12	Square Support Box 12"x12" (SQS Special)	-	313.00	-	-

Industrial Chimney Company

Excel 103HT Insulated Class A Chimney

Supports					
For stock status, please visit order.aes4home.com or call 800-682-9722					
Item No.	Description	5"	6"	7"	8"
ICXM__ERTA	Round Support Trim Ring, 1/12-4/12	-	$126.00		
ICXM__ERTB	Round Support Trim Ring, 4/12-8/12	-	126.00		
ICXM__ERTC	Round Support Trim Ring, 8/12-12/12	-	126.00		126.00*
ICXM__ERDSE	Round Support Extension, 24" Long	-	-	138.00	
ICXM__ESSE	Square Support Extension, 24" Long	-	104.00	113.00	124.00
ICXM__ECT	Flat Chimney Trim Ring	-	104.00		
ICXM__ECTA	Chimney Trim Ring, 1/12-4/12	-	126.00		
ICXM__ECTB	Chimney Trim Ring, 4/12-8/12	-	126.00		
ICXM__ECTC	Chimney Trim Ring, 8/12-12/12	-	126.00		
ICXM5ESR	5" Roof Support	149.00	-		
ICXM5EWS	5" Wall Support	140.00*	-		
ICXM5EOS	5" Offset Support	81.00*	-		
ICXMESR	6", 7", 8" Roof Support	-	162.00		
ICXMEWS	6", 7", 8" Wall Support	-	140.00		
ICXMEOS	6", 7", 8" Offset Support - 24" Long	-	88.00		
ICXMEWSE	Extended Wall Support, 12 1/2" - 18 1/2"	-	295.00		
ICXMEWSR	Wall Support (Old Style)	-	192.00		
ICXM56ERDSE	Round Support Extension Collar	129.00		-	
ICXM__ESQSC	Square Support Storm Collar - Size Specific *(for Tightest/ Best Fit)*	-	92.00	99.00	106.00
NEW ICXMESQSCX	*Universal* Square Support Storm Collar *(5 1/4" Wide Rim, fits on 6/7/8" Excel)*	66.00			
ICXMEGEG	Gable End Guide, Adjustable Arms Fit up to 12/12 Pitch	-	124.00		
Flashings (All ICC flashings include a Storm Collar)					
ICXF__EF	Flat Flashing	$165.00*	$183.00	$212.00	$248.00
ICXF__EFA	Flashing, 1/12 - 7/12	165.00*	183.00	212.00	248.00
ICXF__EFB	Flashing, 8/12 - 12/12	174.00*	194.00	223.00	257.00
ICXF__EFC	Flashing, 12/12 - 21/12	232.00*	257.00	286.00	327.00
ICXF__EMFA	Metal Roof Flashing, 1/12 - 7/12	246.00*	264.00	293.00	329.00
ICXF__EMFB	Metal Roof Flashing, 8/12 - 12/12	252.00	273.00	300.00	336.00
ICXF__EMFC	Metal Roof Flashing, 12/12 - 21/12	313.00*	336.00	369.00	405.00
ICXF__EVF	Vented Flat Flashing	-	250.00	297.00	354.00*
ICXF__EVFA	Vented Flashing, 1/12 - 7/12	-	250.00	297.00	354.00
ICXF__EVFB	Vented Flashing, 8/12 - 12/12	-	259.00	306.00	363.00
ICXF__EVFC	Vented Flashing, 12/12 - 21/12	-	324.00	372.00	428.00
ICXF__EFP	Peak Flashing, 2/12 -12/12	-	396.00	403.00	410.00
ICXF__ESF	Stainless Steel Flat Flashing	-	338.00	360.00	383.00
ICXF__ESFA	Stainless Steel Flashing, 1/12 - 7/12	-	338.00	360.00	383.00
ICXF__ESFB	Stainless Steel Flashing, 8/12 - 12/12	-	356.00	381.00*	396.00
ICXF__ESFC	Stainless Steel Flashing, 12/12 - 21/12	-	437.00*	477.00*	518.00*
ICXF__ELFA	Flexible Base Flashing, 1/12 - 7/12	-	851.00		
ICXF__ELFB	Flexible Base Flashing, 8/12 - 12/12	-	851.00		

Industrial Chimney Company

Excel 103HT Insulated Class A Chimney

Firestops					
For stock status, please visit order.aes4home.com or call 800-682-9722					
Item No.	Description	5"	6"	7"	8"
ICXM__ERS	Regular Radiation Shield/Firestop	$124.00	$138.00	$158.00	$169.00
ICXM__EWRS	Wall Radiation Shield	266.00	297.00	302.00	311.00
ICXM__EWRSI	Insulated Wall Radiation Shield	-	498.00	527.00	556.00
ICXM__EST	Stainless Steel Trim for EWRS	-	77.00		
ICXM__ERRS	Roof Radiation Shield	-	133.00	144.00	160.00
ICXM__ERSC	Cathedral Radiation Shield	-	237.00	264.00	291.00
ICXM__EWRSI30	Angled Firestop 30°	-	444.00		468.00
ICXM__EWRSI45	Angled Firestop 45°	-	444.00		468.00
Accessories					
ICXM__EX	Flue Extension	$111.00	$124.00	$129.00	$138.00
ICXM__EAP	Anchor Plate	169.00	169.00	196.00	228.00
ICXM__EAPD	Anchor Plate Damper w/12" Chain	-	644.00*		
ICXM__EAPD2	Anchor Plate Damper w/Rod	-	572.00*		
ICXM__ETD	Chimney Top Damper	-	-	471.00*	498.00*
ICXM__ELB	Locking Band	-	50.00	54.00	59.00
ICXM5ERB	5" Roof Brace	279.00	-		
ICXMERB	6", 7", 8" Roof Brace	-	279.00		
ICXMESRB	6", 7", 8" Stainless Steel Roof Brace - Universal	-	450.00		
ICXMESW	Adjustable Snow Wedge, 4/12 - 12/12	-	455.00		
ICXMEAS	Adjustable Support Stud	120.00			
ICXMEWC	Wall Channel	79.00			
ICXMESSS	Stainless Tek Screws (100)	54.00			
ICXMESC	Universal Storm Collar, 2" Wide **LIMITED TO STOCK ON HAND - REPLACED BY ICXMESCX**	52.00			
NEW ICXMESC**X**	Univesal Storm Collar, 3-3/4" Wide - **WILL NOT SHIP UNTIL ICXMESC STOCK IS DEPLETED**	52.00			
ICXMESSC	Stainless Steel Storm Collar	99.00			
ICXMECR	Caulking Roll	23.00			
ICXMHK	Hardware Kit - Includes SS Bolts, Elevator Bolts, Thumb-screws, Wingnuts and Variety of Nuts and Washers	99.00			
ICXMERBS	Roof Brace Stiffener	246.00			
ICXF__EVCC	Ventilated Chase Cone	-	180.00	190.00	201.00

Dealer Showroom Display Items

Item No.	Description	Wt.	Net Cost
ICZZ6DISPLAY	ICC Chimney Pipe Showroom Display	200 lbs.	$1,180.00
An instructional guide for your showroom. Highlights the safety features and most commonly used parts of Excel 103HT chimney for your customers. Comes complete with all venting components and signage. Footprint is approximately 2'D x 3'W.			
ICZPOPXLPOP2	Excel Cardboard Display Stand *(fits on single piece of excel pipe, not included)*	0.5 lbs.	60.00
ICZPOPADUB	Ultra Black Cardboard Display Stand *(fits on single piece of ultra black pipe, not included)*	0.5 lbs.	60.00

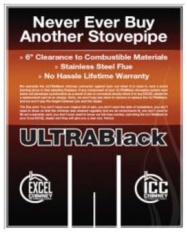

Industrial Chimney Company

Residential Insulated Stack (R.I.S.)

Residential Insulated Stack (R.I.S.) may be used to extend a masonry chimney which has been lined with an approved chimney liner. This type of repair is generally found where the original flue tile has been damaged by chimney fire or moisture and, in cases, where the flue has been relined to reduce its cross section. R.I.S. may also be used as a chimney for masonry fireplaces.

R.I.S. chimneys have been specifically designed, tested and listed to vent masonry fireplaces in residential installations and to extend existing masonry chimneys. One of the primary applications of R.I.S. is for the repair of earthquake damaged masonry fireplaces and chimneys. ICC provides components designed to correctly adapt its products to existing masonry construction and warrants the performance and mechanical integrity of its system when it is correctly installed on a structurally sound foundation.

The R.I.S. anchor plate has a single wall connector section designed to allow a metal chimney liner to be screwed directly to it. Refer to the Excel 103HT brochure at the end of this section for chimney sizing tables and recommendations on flue height.

The requirements for chimney repair vary substantially from jurisdiction to jurisdiction. We strongly recommend that you contact your local building officials to determine the requirements in your particular area before attempting any chimney repairs. Some municipalities have specific written repair requirements; most other areas are not as specific. Two sources of information concerning the construction and inspection of masonry chimneys and fireplaces are “The Residential Fireplace and Chimney Handbook” written by the Masonry Institute of America and “Repair of Earthquake Damaged Masonry Chimneys Using New Metal Chimneys” by the City of Los Angeles Departments of Building and Safety.

Stock status may vary between AES warehouse locations. To confirm stock status, log onto the AES Partners Site or call AES Customer Service 1-800-682-9722.

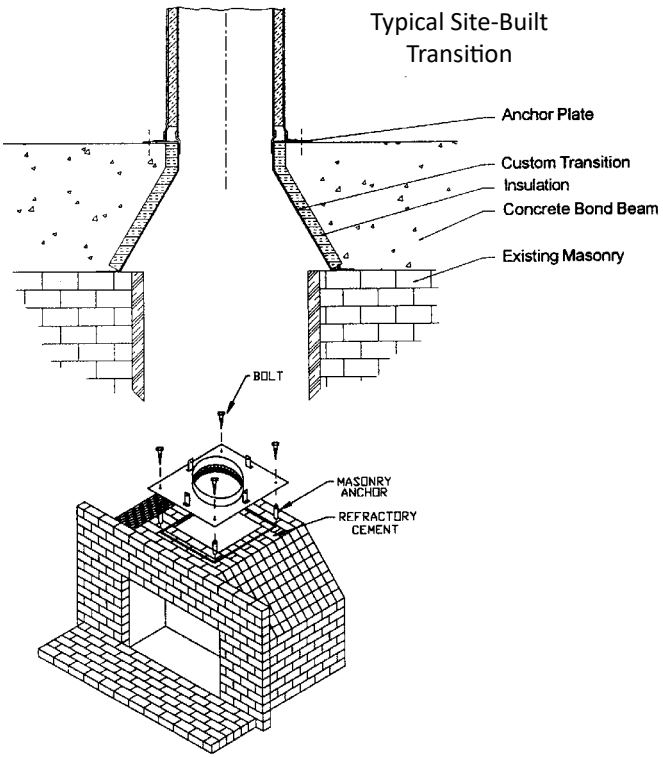

Typical Fireplace Installation

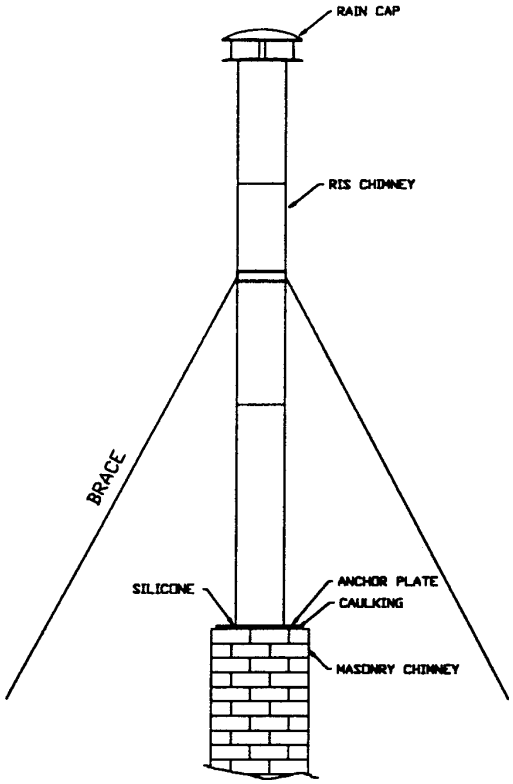

Typical Masonry Chimney Extension

Industrial Chimney Company

Residential Insulated Stack (R.I.S.) Large Diameter Chimney 10”-24”

R.I.S. Chimney Lengths - All Stainless Steel

For stock status, please visit order.aes4home.com or call 800-682-9722

Item No.	Description	10" (430 SS)	12" (430 SS)	14" (430 SS)	16” (430 SS)	18" (304 SS)	20" (304 SS)	22" (304 SS)	24" (304 SS)
ICRC__RIL4	48" Length	$978.00	$1,018.00	$1,058.00	$1,289.00	$2,063.00	$2,297.00	$2,539.00*	$2,728.00*
ICRC__RIL2	24" Length	574.00	613.00	669.00	807.00	1,209.00	1,345.00	1,478.00*	1,581.00*
ICRC__RIL18	18" Length	492.00	526.00	569.00	682.00	987.00	1,103.00	1,220.00*	1,292.00*
ICRC__RIL1	12" Length	374.00	397.00	428.00	516.00	728.00	816.00	883.00*	944.00*
ICRC__RILA2	24" Adj. Length	802.00	858.00	938.00	1,128.00	1,694.00	1,883.00	2,066.00*	2,218.00*
ICRC__RILA1	12"Adj. Length	523.00	556.00	602.00	722.00	1,018.00	1,142.00	1,235.00*	1,323.00*
ICRE__RIT	Regular Tee	1,363.00	1,437.00	1,594.00*	1,775.00	2,943.00*	3,361.00*	3,822.00*	4,290.00*
ICRE__RIE15	15° Elbow	638.00	746.00	805.00	823.00	989.00*	1,086.00	1,217.00*	1,320.00*
ICRE__RIE30	30° Elbow	782.00	841.00	917.00	943.00	1,130.00	1,253.00	1,401.00*	1,471.00*
ICRE__RIE45	45° Elbow	820.00	887.00	923.00	1,010.00	1,235.00*	1,407.00	1,530.00*	-
ICRE__RITC	Regular Tee Cap	323.00	362.00*	405.00*	454.00	510.00*	689.00*	774.00*	861.00*
ICRM__RSLB	Locking Band	80.00	88.00	95.00	106.00	116.00*	129.00*	136.00*	149.00*

Galvalume Items with Stainless Steel Lining

Item No.	Description	10"	12"	14"	16" LIMITED TO STOCK ON HAND	18"	20"	22"	24"
ICRC__RIL4G	48" Length	-	-	-	-	$1,619.00	$1,804.00	$2,001.00*	$2,142.00*
ICRC__RIL2G	24" Length	-	-	-	-	984.00	1,097.00*	1,209.00*	1,292.00*
ICRC__RIL18G	18" Length	-	-	-	-	821.00	917.00	1,007.00*	1,077.00*
ICRC__RIL1G	12" Length	-	-	-	350.00**	618.00	695.00	751.00*	798.00*
ICRC__RILA2G	24" Adj. Length	-	-	-	-	1,375.00	1,539.00	1,694.00*	1,807.00*
ICRC__RILA1G	12" Adj. Length	-	-	-	-	866.00	971.00	1,049.00*	1,117.00*
ICRE__RITG	Regular Tee	-	-	-	-	2,400.00*	2,708.00*	3,048.00*	3,394.00*
ICRE__RIE15G	15° Elbow	-	-	-	-	889.00	1,407.00	1,099.00*	1,186.00*
ICRE__RIE30G	30° Elbow	-	-	-	-	1,017.00	1,130.00*	1,263.00*	1,322.00*
ICRE__RIE45G	45° Elbow	-	-	-	-	1,109.00	1,266.00	1,378.00*	-
ICRM__RGLB	Locking Band	57.00*	57.00*	59.00*	-	77.00*	85.00*	93.00*	100.00*
ICRM__RBSG	Base Support	446.00*	433.00*	441.00*	500.00*	567.00*	641.00*	718.00*	797.00*
ICRM__RWSG	Wall Support	-	-	620.00*	677.00	759.00*	825.00	910.00*	981.00*
ICRM__RWBG	Wall Band	136.00*	162.00*	203.00*	226.00	257.00*	421.00*	433.00*	441.00*

Industrial Chimney Company

Residential Insulated Stack (R.I.S.) Large Diameter Chimney 10”-24”

For stock status, please visit order.aes4home.com or call 800-682-9722

Item No.	Description	10"	12"	14"	16"	18"	20"	22"	24"
Supports									
ICRM__RBS	Base Support	$1,104.00*	$1,061.00*	$1,081.00*	$1,245.00*	$1,422.00*	$1,619.00*	$1,819.00	$2,034.00*
ICRM__RSR	Roof Support	267.00	428.00	577.00	638.00	718.00	825.00	889.00	961.00*
ICRM__RWS	Wall Support	251.00	285.00	961.00*	1,034.00*	1,502.00*	1,610.00*	1,874.00*	2,103.00*
ICRM__RAP	Anchor Plate	364.00	428.00	446.00	464.00	469.00	546.00	592.00	648.00*
ICRM__RAPD	Anchor Plate w/Damper	921.00	956.00	1,140.00	1,284.00	1,541.00*	1,797.00*	2,053.00*	2,317.00*
ICRM__ROS	Offset Support	231.00	413.00	582.00	648.00	733.00*	915.00*	994.00*	1,079.00*
ICRM__RWB	Wall Band	292.00	305.00	326.00	357.00	390.00*	413.00*	462.00	500.00*
ICRM__RGB	Guy Band	136.00	162.00	203.00	213.00	249.00	385.00*	397.00*	405.00*
ICRM__RRB	Roof Brace	410.00	426.00	472.00	515.00	554.00	689.00	702.00*	713.00*
ICRM__RRS	Radiation Shield	228.00	244.00	264.00	280.00	308.00	336.00*	369.00	397.00*
ICRM__RTS	Roof Top Radiation Shield	190.00	231.00	-	-	-	-	-	-
ICRM__RFS	Firestop	106.00	129.00	152.00	190.00	213.00	308.00	328.00	357.00*
Caps and Accessories									
ICRM__RRC	Rain Cap	$502.00	$526.00	$633.00	$730.00	$841.00	$1,033.00*	$1,125.00	$1,181.00
ICRM__RRCB	Rain Cap Base	251.00	262.00	318.00	364.00	421.00	518.00	567.00	592.00
ICRM__RRCFS	Rain Cap Firescreen	80.00	88.00	108.00	123.00	144.00	170.00*	198.00*	234.00*
ICRM__RRCSS	Rain Cap w/screen	582.00	613.00	741.00	853.00	987.00	1,202.00	1,322.00*	1,414.00*
ICRM__RDRC	Deluxe Rain Cap	625.00	666.00	-	-	-	-	-	-
ICRM__REX	Flue Extension	213.00	234.00	269.00	305.00*	344.00*	392.00*	441.00*	492.00*
Flashings With Storm Collars									
ICRF__RF	Flat Flashing	$336.00	$362.00	$413.00	$436.00	$526.00	$669.00	$695.00	$705.00*
ICRF__RFA	1-7/12 Flashing	387.00	418.00	474.00	500.00	605.00*	769.00	797.00	810.00*
ICRF__RFB	8-12/12 Flashing	454.00	490.00	556.00	590.00	710.00	902.00	938.00	953.00*
ICRF__RMFA	1/2-7/12 Flashing	456.00	520.00	-	-	-	-	-	-
ICRF__RMFB	8/12-12/12 Flashing	505.00*	582.00*	-	-	-	-	-	-
ICRF__RMFC	12/12-21/12 Flashing	567.00*	661.00*	-	-	-	-	-	-
ICRF__RVF	Vented Flat Flashing	431.00	497.00	-	-	-	-	-	-
ICRF__RVFA	1/12-7/12 Flashing	482.00	551.00	-	-	-	-	-	-
ICRF__RVFB	8/12-12/12 Flashing	549.00	631.00	-	-	-	-	-	-
ICRM__RSC	Storm Collar	80.00	88.00	108.00	129.00	144.00	172.00	205.00	241.00*
ICRM__RSCSS	S/S Storm Collar	123.00	136.00	193.00	216.00	249.00	298.00	321.00	369.00*

Industrial Chimney Company

Residential Insulated Stack (R.I.S.)

Diameter		10"	12"	14"	16"	18"	20"	22"	24"
R.I.S. Vertical Capacity Table									
Anchor Plate		120'	102'	89'	78'	70'	64'	58'	53'
Floor Support		120'	102'	89'	78'	70'	64'	58'	53'
Wall Support		97'	82'	72'	63'	57'	51'	47'	43'
Offset Support		40'	35'	30'	25'	20'	20'	20'	20'
Roof Support		40'	35'	30'	25'	20'	20'	20'	20'
Insulated Tee		53'	45'	39'	35'	31'	28'	26'	23'
Chimney Length		120'	102'	89'	78'	70'	64'	58'	53'
R.I.S. Minimum Rough Opening Dimensions									
Combustible Wall, Floor, or Roof	Hole Size (in)	16	18	20	22	24	26	28	30
Non-Combustible Wall, Floor, or Roof	Hole Size (in)	13	15	17	19	21	23	25	27
R.I.S. Chimney Dimensions									
Approx Lbs./Ft.		6	7	8	9	13	14	16	17
Outer Diameter		12-1/4"	14-1/4"	16-1/4"	18-1/4"	20-1/4"	22-1/4"	24-1/4"	26-1/4"

R.I.S. Nominal to Installed Flue Length					
Nominal Length	48"	24"	24" adj.	12"	12" adj.
Installed Length	46-1/4"	22-1/4"	13-1/2" to 22-1/4"	10-1/4"	7-1/2" to 10-1/4"

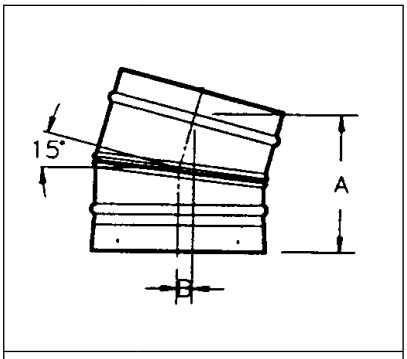

R.I.S. 15° Elbow Dimensions		
I.D.	A	B
10"	6-7/8"	3/4"
12"	7-3/8"	7/8"
14"	7-7/8"	7/8"
16"	8-3/8"	1"
18"	8-7/8"	1"
20"	9-3/8"	1-1/8"
22"	9-7/8"	1-1/8"
24"	10-3/8"	1-1/4"

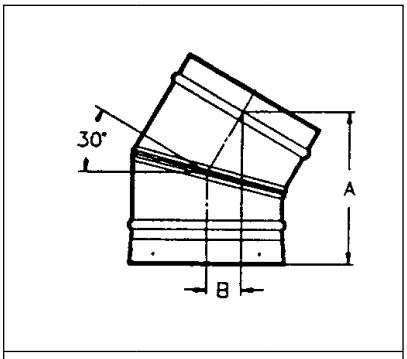

R.I.S. 30° Elbow Dimensions		
I.D.	A	B
10"	8-1/2"	1-7/8"
12"	9"	2"
14"	9-1/2"	2-1/8"
16"	10"	2-1/4"
18"	10-1/2"	2-1/2"
20"	11"	2-5/8"
22"	11-1/2"	2-3/4"
24"	12"	2-7/8"

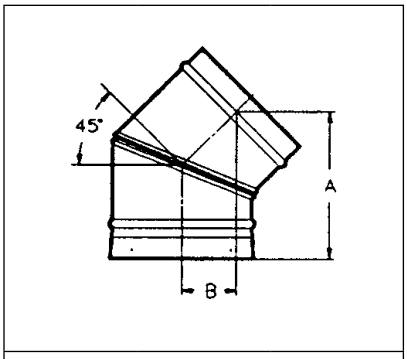

R.I.S. 45° Elbow Dimensions		
I.D.	A	B
10"	9-3/8"	1-7/8"
12"	10"	2"
14"	10-3/4"	2-1/8"
16"	11-1/2"	2-1/4"
18"	12-1/4"	2-1/2"
20"	12-7/8"	2-5/8"
22"	13-1/2"	2-3/4"
24"	14-1/4"	2-7/8"

Industrial Chimney Company

Residential Insulated Stack (R.I.S.) Large Diameter Chimney

RIS Offset Table 10" to 16"

All measurements are in inches.

Diameter	Length Between Elbows	2 X 15° Offset Rise		2 X 30° Offset Rise		2 X 45° Offset Rise	
10"	No Length	1.57	11.89	3.77	14.09	6.58	15.88
	12" Length	4.35	22.28	9.15	23.40	14.18	23.48
	24" Length	7.45	33.87	15.15	33.79	22.66	31.96
	48" Length	13.67	57.05	27.15	54.58	39.63	48.93
	48" + 12"	16.45	67.43	32.52	63.88	47.23	56.53
	48" + 24"	19.55	79.03	38.52	74.28	55.72	65.02
	48" + 24" + 12"	22.34	89.41	43.90	83.59	63.32	72.62
	48" + 48"	25.77	102.21	50.52	95.06	72.69	81.99
12"	No Length	1.57	11.89	4.02	15.02	7.11	17.16
	12" Length	4.35	22.28	9.40	24.33	14.71	24.76
	24" Length	7.45	33.87	15.40	34.72	23.19	33.24
	48" Length	13.67	57.05	27.40	55.51	40.16	50.21
	48" + 12"	16.45	67.43	32.77	64.82	47.77	57.82
	48" + 24"	19.55	79.03	38.77	75.21	56.25	66.30
	48" + 24" + 12"	22.34	89.41	44.15	84.52	63.85	73.90
	48" + 48"	25.77	102.21	50.77	95.99	73.22	83.27
14"	No Length	1.70	12.88	4.27	15.95	7.81	18.86
	12" Length	4.48	23.26	9.65	25.26	15.41	26.46
	24" Length	7.58	34.85	15.65	35.66	23.90	34.95
	48" Length	13.80	58.03	27.65	56.44	40.87	51.92
	48" + 12"	16.58	68.42	33.02	65.75	48.47	59.52
	48" + 24"	19.68	80.01	39.02	76.14	56.96	68.01
	48" + 24" + 12"	22.47	90.39	44.40	85.45	64.56	75.61
	48" + 48"	25.89	103.19	51.02	96.93	73.93	84.98

Industrial Chimney Company

Residential Insulated Stack (R.I.S.) Large Diameter Chimney

RIS Offset Table 18" to 24"

All measurements are in inches.

Diameter	Length Between Elbows	2 X 15° Offset Rise		2 X 30° Offset Rise		2 X 45° Offset Rise	
18"	No Length	1.82	13.86	4.77	17.82	8.87	21.42
	12" Length	4.61	24.24	10.15	27.13	16.48	29.03
	24" Length	7.71	35.83	16.15	37.52	24.96	37.51
	48" Length	13.92	59.02	28.15	58.31	41.93	54.48
	48" + 12"	16.71	69.40	33.52	67.62	49.53	62.08
	48" + 24"	19.81	80.99	39.52	78.01	58.02	70.57
	48" + 24" + 12"	22.59	91.38	44.90	87.32	65.62	78.17
	48" + 48"	26.02	104.17	51.52	98.79	74.99	87.54
20"	No Length	1.82	13.86	5.15	19.22	9.58	23.13
	12" Length	4.61	24.24	10.52	28.53	17.18	30.73
	24" Length	7.71	35.83	16.52	38.92	25.67	39.22
	48" Length	13.92	59.02	28.52	59.71	42.64	56.19
	48" + 12"	16.71	69.40	33.90	69.02	50.27	63.79
	48" + 24"	19.81	80.99	39.90	79.41	58.73	72.28
	48" + 24" + 12"	22.59	91.38	45.27	88.72	66.33	79.88
	48" + 48"	26.02	104.17	51.90	100.19	75.70	89.25
22"	No Length	1.95	14.84	5.40	20.15	9.93	23.98
	12" Length	4.74	25.23	10.77	29.46	17.54	31.59
	24" Length	7.84	36.82	16.77	39.86	26.02	40.07
	48" Length	14.05	60.00	26.77	60.64	42.99	57.04
	48" + 12"	16.84	70.38	34.15	69.95	50.99	64.64
	48" + 24"	19.94	81.97	40.15	80.34	59.08	73.13
	48" + 24" + 12"	22.72	92.36	45.52	89.65	66.68	80.73
	48" + 48"	26.15	105.16	52.15	101.13	76.05	90.10
24"	No Length	1.95	14.84	5.65	21.09	10.64	25.69
	12" Length	4.74	25.23	11.02	30.40	18.24	33.29
	24" Length	7.84	36.82	17.02	40.79	26.73	41.78
	48" Length	14.05	60.00	29.02	61.57	43.70	58.75
	48" + 12"	16.84	70.38	34.40	70.88	51.30	66.35
	48" + 24"	19.94	81.97	40.40	81.27	59.79	74.84
	48" + 24" + 12"	22.72	92.36	45.77	90.58	67.39	82.44
	48" + 48"	26.15	105.16	52.40	102.00	76.76	91.81

Industrial Chimney Company

Ultrablack FS Double Wall Black Stovepipe

Ultrablack FS (fully shielded) double wall black stovepipe requires just 6" clearance to combustible materials in all diameters-even when installed in a corner or parallel with a ceiling (Check manufacturer's clearance requirements).

Ultrablack has a smooth, clean appearance to complement any stove installation and maximize flue gas temperatures, insuring good draft when used with catalytic stoves. It's constructed of type 304 Ultra matte stainless steel, a specially designed stainless steel that is more attractive and scratch resistant when painted. Ultrablack is painted with Forrest Paint "Stove Bright" Flat Black (FP6304) premium quality high temperature stove paint. Parts are shipped wrapped in heavy paper or plastic to insure an attractive, scratch free finish.

Ultrablack assembles like a regular single wall stove pipe without complicated, unsightly twist lock connectors or spot welds, and no cutting required for installation. It easily fits most stoves, including cast iron stoves and those with oval collars and comes complete with black oxide screws and pre-drilled holes to insure safe, easy installation.

7" ULTRABLACK CHIMNEY IS NON-STOCK WITH EXTENDED LEAD TIMES
CHECK INVENTORY AT ORDER.AES4HOME.COM

Ultrablack Chimney Lengths

For stock status, please visit order.aes4home.com or call 800-682-9722

Item No.	Description	6"		7" NON-STOCK EXTENDED LEAD TIMES		8"	
		Wt.	Retail	Wt.	Retail	Wt.	Retail
ICUC__UBAF	Adjustable Length, 40" to 68" w/Trim Collar	18 lbs.	$500.00†	18 lbs.	$576.00*	18 lbs.	$626.00†
ICUC__UB3F	36" Length	9 lbs.	281.00†	9 lbs.	300.00*	9 lbs.	330.00†
ICUC__UB2F	24" Length	10 lbs.	215.00	10 lbs.	258.00*	10 lbs.	286.00
ICUC__UB18F	18" Length	4 lbs.	194.00	4 lbs.	231.00*	4 lbs.	272.00
ICUC__UB1F	12" Length	3 lbs.	175.00	3 lbs.	208.00*	3 lbs.	254.00
ICUC__UB5F	5" Length	2 lbs.	102.00	2 lbs.	120.00*	2 lbs.	132.00
ICUC__UB6SF	6" Slip Section	2 lbs.	132.00	2 lbs.	152.00*	2 lbs.	182.00
ICUC__UB1SF	12" Slip Section	3 lbs.	189.00	3 lbs.	221.00*	3 lbs.	267.00
ICUC__UB18SF	18" Slip Section	6 lbs.	205.00	6 lbs.	242.00*	6 lbs.	284.00
Tees and Elbows							
ICUE__UBT	Tee with Plug and Trim Collar	5 lbs.	$274.00	5 lbs.	$284.00*	5 lbs.	$336.00
ICUE__UB30	30° Elbow	3 lbs.	152.00	3 lbs.	168.00*	3 lbs.	196.00
ICUE__UB45	45° Elbow	4 lbs.	152.00	4 lbs.	171.00*	4 lbs.	208.00
ICUE__UB90	90° Elbow	4 lbs.	215.00	4 lbs.	242.00*	4 lbs.	288.00
ICUE6UB15	15° Elbow	4 lbs.	150.00	-	-	-	-
Adpaters							
ICUM__UBM	Masonry Adapter	4 lbs.	$155.00	4 lbs.	$168.00	4 lbs.	$173.00
ICUM__UBMA	Masonry Thimble Adapter	-	152.00	-	-	-	-
ICUM__UBSE	Stove Adapter	1 lb.	47.00	1 lb.	51.00*	1 lb.	56.00
ICUM__UBD	Damper Section	1 lb.	212.00	1 lb.	242.00*	1 lb.	272.00
ICUM__UBTC	Trim Collar, Covers Crimped Edge	1 lb.	35.00	1 lb.	40.00*	1 lb.	44.00
ICUMUBI56	Increaser 5" - 6"	2 lbs.	212.00	-	-	-	-
ICUMUBI67	Increaser 6" - 7"	2 lbs.	212.00	-	-	-	-
ICUMUBI68	Increaser 6" - 8"	2 lbs.	212.00	-	-	-	-
ICUMUBI78	Increaser 7" - 8"	-	-	2 lbs.	212.00*	-	-
ICUMUBR87	Reducer 8" - 7"	-	-	-	-	2 lbs.	212.00
ICUMUBR86	Reducer 8" - 6"	-	-	-	-	2 lbs.	212.00
ICUMUBR76	Reducer 7" - 6"	-	-	2 lbs.	212.00*	-	-
ICUM86UBORF	8" - 6" Oval to Round Adapter **PROD. SUSPENDED**	-	-	-	-	4.5 lbs.	238.00
ICUM8UBORF	Oval to Round Adapter	-	-	-	-	-	233.00
ICUMLBS	Long Black Screws (100)	-	60.00	-	-	-	-
ICUMSBS	Short Black Screws (100)	-	37.00	-	-	-	-
ICUM__UBTR	Adjustable 6" Conical Trim Ring	.25 lbs.	33.00	-	-	-	42.00

Excel Prime

24-Gauge Matte Black Stove Pipe

24 gauge heavy steel construction – Extra resistant to damage & long lasting use.
Laser Butt welded seams – Creates perfectly round lengths, making installation incredibly fast and easy.
Made of Satin Coat Steel – Designed to be painted for maximum paint adhesion, minimal scratches and excellent corrosion resistance.
New Smoke-Free Stove Bright Flat Black paint – No more smoke at start up & easy touchups.
Universal design - Fits any brand of Class A chimney and fits almost all stoves without an adapter.
5 year, No questions asked, 100% full replacement warranty.

6" Lengths				
Item No.	*Description*	*Pkg.*	*Retail*	*Stocked*
ICSC6SW1	6” x 12” Straight Length		$72.00	Y
ICSC6SW18	6” x 18” Straight Length		80.00	Y
ICSC6SW1S	6” x 12” Slip Length		72.00	Y
ICSC6SW2	6” x 24" Straight Length		94.00	Y
ICSC6SW3	6” x 36” Straight Length		129.00	Y
ICSC6SW4	6” x 48” Straight Length		168.00	Y
ICSC6SWA	6" x 40" - 68" Adjustable Length		253.00	Y
ICSC6SW6S	6" x 6" Slip Length		69.00	Y
6" Tees				
ICSE6SWT	6” Tee w/Out Cap		$99.00	Y
ICSE6SWTP	6” Tee Cap		64.00	Y
6" Elbows				
ICSE6SW45	6” x 45° Elbow		$80.00	Y
ICSE6SWA90	6” x 90° Adjustable Elbow		240.00	Y
ICSE6SW90	6" x 90° Elbow		94.00	Y
ICSE6SW90C	6" x 90° Clean Out Elbow		187.00	Y
ICSE6SW90S	6" x 90° Slip Elbow		165.00	Y
6" Heat Shields				
ICSM6SW1HS	6” x 12” Heat Shield		$64.00	Y
ICSM6SW2HS	6” x 24” Heat Shield		77.00	Y
ICSM6SW3HS	6” x 36” Heat Shield		94.00	Y
ICSM6SW45HS	6” x 45° Heat Shield		77.00	Y
ICSM6SW90HS	6” x 90° Heat Shield		94.00	Y
ICSM6SWHSS	6” Heat Shield Spacers	6	44.00	Y

45˚ Elbow

90˚ Elbow

7” PRIME CHIMNEY IS NON-STOCK - MADE TO ORDER

7" Lengths				
tem No.	*Description*	*Pkg.*	*Retail*	*Stocked*
ICSC7SW1	7” x 12” Straight Length - **MADE TO ORDER**		$75.00	N
ICSC7SW18	7” x 18” Straight Length - **MADE TO ORDER**		88.00	N
ICSC7SW1S	7” x 12” Slip Length - **MADE TO ORDER**		75.00	N
ICSC7SW2	7” x 24" Straight Length - **MADE TO ORDER**		102.00	N
ICSC7SW3	7” x 36” Straight Length - **MADE TO ORDER**		138.00	N
ICSC7SW4	7” x 48” Straight Length - **MADE TO ORDER**		184.00	N
ICSC7SWA	7" x 40" - 68" Adjustable Length - **MADE TO ORDER**		286.00	N
ICSC7SW6S	7" x 6" Slip Length - **MADE TO ORDER**		72.00	N
7" Tees				
ICSE7SWT	7” Tee w/Out Cap - **MADE TO ORDER**		$110.00	N
ICSE7SWTP	7” Tee Cap - **MADE TO ORDER**		77.00	N

7” continued on next page...

Tee Cap

Excel Prime

24-Gauge Matte Black Stove Pipe

7" PRIME CHIMNEY IS NON-STOCK - MADE TO ORDER

7" Elbows				
Item No.	*Description*	*Pkg.*	*Retail*	*Stocked*
ICSE7SW45	7" x 45° Elbow - **MADE TO ORDER**		$83.00	N
ICSE7SWA90	7" x 90° Adjustable Elbow - **LIMITED TO STOCK ON HAND**		247.00	LTSD
ICSE7SW90	7" x 90° Elbow - **MADE TO ORDER**		99.00	N
ICSE7SW90C	7" x 90° Clean Out Elbow - **MADE TO ORDER**		203.00	N
ICSE7SW90S	7" x 90° Slip Elbow - **MADE TO ORDER**		173.00	N
Heat Shields				
ICSM7SW45HS	7" x 45° Heat Shield - **MADE TO ORDER**		$77.00	N
ICSM7SW90HS	7" x 90° Heat Shield - **MADE TO ORDER**		94.00	N

Masonry Adapter

8" Lengths				
Item No.	*Description*	*Pkg.*	*Retail*	*Stocked*
ICSC8SW1	8" x 12" Straight Length		$77.00	Y
ICSC8SW18	8" x 18" Straight Length		91.00	Y
ICSC8SW1S	8" x 12" Slip Length		77.00	Y
ICSC8SW2	8" x 24" Straight Length		110.00	Y
ICSC8SW3	8" x 36" Straight Length		149.00	Y
ICSC8SW4	8" x 48" Straight Length		201.00	Y
ICSC8SWA	8" x 40" - 68" Adjustable Length		316.00	Y
ICSC8SW6S	8" x 6" Slip Length		75.00	Y
8" Tees				
ICSE8SWT	8" Tee w/Out Cap		$116.00	Y
ICSE8SWTP	8" Tee Cap		91.00	Y
8" Elbows				
ICSE8SW45	8" x 45° Elbow		$88.00	Y
ICSE8SWA90	8" x 90° Adjustable Elbow **LIMITED TO STOCK ON HAND**		133.00	LTSD
ICSE8SW90	8" x 90° Elbow		107.00	Y
ICSE8SW90C	8" x 90° Clean Out Elbow		217.00	N
ICSE8SW90S	8" x 90" Degree Slip Elbow		184.00	N
Heat Shields				
ICSM8SW1HS	8" x 12" Heat Shield		$77.00	Y
ICSM8SW2HS	8" x 24" Heat Shield		94.00	N
ICSM8SW3HS	8" x 36" Heat Shield		110.00	N
ICSM8SW45HS	8" x 45° Heat Shield		77.00	Y
ICSM8SW90HS	8" x 90° Heat Shield		94.00	Y
ICSM8SWHSS	8" Heat Shield Spacers	6	44.00	N
Adapters				
ICSMSWSI67	6" - 7" Increaser		$101.00	Y
ICSMSWSR76	7" - 6" Reducer		101.00	Y
ICSMSWSI68	6" - 8" Increaser		101.00	Y
ICSM6SWM	Masonry Adapter		146.00	Y
ICSMSWSR86	8" - 6" Reducer		101.00	Y
ICSMSWSR87	8" - 7" Reducer		101.00	N
ICUM6UBTR	Adjustable 6" Conical Trim Ring		33.00	N
ICUM8UBTR	Adjustable 8" Conical Trim Ring		42.00	N

Tee

Slip Connector

Industrial Chimney Company

EXCEL Pellet Vent

EXCEL Pellet is manufactured using specialized machinery which makes it possible to maintain strict tolerance between components. This ensures a quality fit and allows the factory to apply a silicone gasket. Both of which help reduce installation problems and installation time. ICC EXCEL Pellet is tested and listed to U.L. Standard 641 and designed for venting pellet stoves, pellet inserts and pellet heaters.

ICC EXCEL Pellet features

- Continuously welded seams leave a sleek, attractive exterior as well as ensuring a tight, leak-free fit between components.
- ICC created specialized machinery to create leak-free elbows, they don't cut corners by using their B-Vent machine.
- The factory installed and tested 100% Silicone gasket eases installation by eliminating the need to tape or silicone the joints on site, this also preserves the clean look of the system.
- Excellent Pellet to Masonry and Pellet to Class A Chimney adapters give you and your installers an alternative to BCADV.
- Each piece is pressure-tested by hand at the factory before it is shipped out, decreasing call-backs from customers with leaky venting.

Adjustable

Tee w/Cap

Class A Chimney Adapter

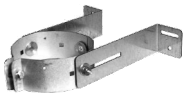
Adjustable Wall Strap

Adjustable Jet Cap

45º Elbow

Adjustable Wall Thimble

Female Flex Adapter

Horizontal Cap

Tee w/Clean Out

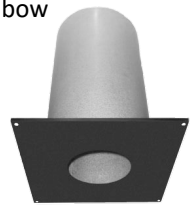
Ceiling Radiation Shield

Vertical Rain Cap

90º Elbow

3" to 4" Adapter

Clean-out Elbow

Flashing Adapter

Harman Style

Large Diameter Flex Adapter

Slip Elbow

Industrial Chimney Company

3” & 4” EXCEL Pellet Vent

Lengths

For stock status, please visit order.aes4home.com or call 800-682-9722

Item No.	Description	3”		4”	
		Wt./Cs.	Retail	Wt./Cs.	Retail
ICPC__PL1	12” Length	2 lbs.	$81.00	2 lbs.	$95.00
ICPC__PL16	16” Length	3 lbs.	100.00	3 lbs.	126.00
ICPC__PL2	24” Length	3 lbs.	119.00	4 lbs.	148.00
ICPC__PL3	36” Length	4 lbs.	152.00	6 lbs.	190.00
ICPC__PL4	48” Length	6 lbs.	190.00	8 lbs.	219.00
ICPC__PL5	5” Length	1 lb.	69.00	2 lbs.	76.00
ICPC__PCOL	12” Clean Out Length	2 lbs.	167.00	2 lbs.	181.00
ICPC__PLA6	8” Adjustable Length (1 3/4” - 6” Installed)	2 lbs.	98.00	2 lbs.	121.00
ICPC__PLA16	16” Adjustable Length (1 3/4” - 14” Installed)	3 lbs.	145.00	4 lbs.	176.00

Tees and Elbows

Item No.	Description	3”		4”	
		Wt./Cs.	Retail	Wt./Cs.	Retail
ICPE__PE45	45 Degree Elbow	1 lb.	$ 131.00	1 lb.	$148.00
ICPE__PE90	90 Degree Elbow	2 lbs.	164.00	2 lbs.	207.00
ICPE__PCOE	90 Degree Clean Out Elbow	2 lbs.	302.00	2 lbs.	316.00
ICPE__PT	Tee w/Cap	2 lbs.	247.00	3 lbs.	306.00
ICPE__PCOT	Clean Out tee w/Cap	2 lbs.	442.00	3 lbs.	475.00
ICPE3PT4	Tee w/Cap & 3” Mouth	-	-	3 lbs.	278.00
ICPE__PE90S	Slip Elbow	-	233.00	-	292.00
ICPE__PTC1	Tee Cap w/Bolt	-	62.00	-	79.00
ICPM3PAT3	3” Stove Adapter Tee, Galvalume	2 lbs.	242.00	-	-
ICPM3PAT3B	3” Stove Adapter Tee, Black	2 lbs.	264.00*	-	-
ICPM3PAT4	3” to 4” Stove Adapter Tee	3 lbs.	283.00	-	-
ICPM4PATF4	4” Flex Adapter Tee	-	-	1 lb.	167.00
ICPM3PATF4	3” - 4” Flex Adapter Tee	1 lb.	152.00	-	-

Accessories

Item No.	Description	3”		4”	
		Wt./Cs.	Retail	Wt./Cs.	Retail
ICPF__PF	Flat Flashing with Storm Collar	2 lbs.	$69.00	2 lbs.	$84.00
ICPM__PCA	Type A Adapter Cap	-	178.00	-	178.00
ICXMEVT	Vinyl Siding Trim	1.5 lbs.	30.00	-	-
ICPM__PAF5	Flex Adapter - Connect 3” or 4” EXCELPellet to a 5” Flex Liner	-	131.00	-	136.00
ICPM__PAF55	Flex Adapter - Connect 3” or 4” EXCELPellet to a 5.5” Flex Liner	-	136.00	-	140.00
ICPM__PAF6	Flex Adapter - Connect 3” or 4” EXCELPellet to a 6” Flex Liner	-	143.00	-	148.00
ICPF3MFB	3” Metal Roof Flashing Adapter 8/12-12/12	-	53.00	-	-
ICPM__PAX6	6” Type A Chimney Reline Adapter - 3” or 4”	-	164.00	-	176.00
ICPM__PAX7	7” Type A Chimney Reline Adapter - 3” or 4”	-	176.00	-	193.00
ICPM__PAX8	8” Type A Chimney Reline Adapter - 3” or 4”	-	200.00	-	207.00

Industrial Chimney Company

3” & 4” EXCEL Black Pellet Vent

EXCEL CHIMNEY The Technology Leaders

Lengths - Black

For stock status, please visit order.aes4home.com or call 800-682-9722

Item No.	*Description*	*3”*		*4”*	
		Wt./Cs.	*Retail*	*Wt./Cs.*	*Retail*
ICPC__PL1B	12” Length - Black	-	$102.00	-	$119.00
ICPC__PL2B	24” Length - Black	-	145.00	-	188.00
ICPC__PL3B	36” Length - Black	-	176.00	-	219.00
ICPC__PL4B	48” Length - Black	-	214.00	-	264.00
ICPC__PL5B	5” Length - Black	-	88.00	-	98.00
ICPC__PL16B	16” Length Black	3 lbs.	126.00	3 lbs.	152.00
ICPC__PLA16B	16” Slip Length - Black	-	183.00	-	219.00
ICPC__PLA6B	8” Slip Length - Black	-	126.00	-	155.00

Tees and Elbows - Black

Item No.	*Description*	*3”*		*4”*	
		Wt./Cs.	*Retail*	*Wt./Cs.*	*Retail*
ICPE__PE45B	45 Degree Elbow - Black	-	$145.00	-	$164.00
ICPE__PE90B	90 Degree Elbow - Black	-	181.00	-	228.00
ICPE__PE90SB	Slip Elbow - Black	-	276.00	-	337.00
ICPE3PT4B	3-4 Increaser Tee w/Cap - Black	-	335.00	-	-
ICPE__PTB	Tee w/Cap - Black	-	278.00	-	337.00
ICPE__PTC1	Tee Cap	-	62.00	-	79.00

Accessories- Black

ICPF4MFA	Metal Roof Flashing Adapter 1/12 - 7/12	-	-	-	$48.00
ICPF__MFB	Pellet AND Gas Metal Roof Flashing Adapter 8/12 - 12/12	3 lbs.	53.00	3 lbs.	55.00
ICPM__PASB	Stove Adapter - Black	-	69.00	-	81.00*
ICPM3PAT4B	3-4” Stove Adapter Tee - Black	-	342.00	-	-
ICPM3PI4B	3”-4” Tapered Stove Adapter Black		190.00	-	-
ICPM3PIT4B	3-4” Tapered Stove Increaser - Black	-	190.00	-	-
ICPM__PWTOC	Wall Thimble w/Outside Air Channel	-	970.00	-	970.00
ICPMPSSS	Zinc Screws for Pellet (100 ea)	-	24.00	-	-

EXCEL CHIMNEY
The Technology Leaders

Accessories

For stock status, please visit order.aes4home.com or call 800-682-9722

Item No.	Description	3"		4"	
		Wt./Cs.	Retail	Wt./Cs.	Retail
ICPF__PFA	1/12-7/12 Flashing w/Storm Collar	3 lbs.	$84.00	3 lbs.	$89.00
ICPF__PFB	8/12-12/12 Flashing w/Storm Collar	3 lbs.	89.00	3 lbs.	97.00
ICPM3PAA5	5" Type A Chimney Adapter	-	183.00	-	-
ICPM__PAA6	6" Class A Chimney Adapter	1 lb.	164.00	1 lb.	176.00
ICPM__PAA7	7" Class A Chimney Adapter	1 lb.	176.00	1 lb.	193.00
ICPM__PAA8	8" Class A Chimney Adapter	1 lb.	200.00	1 lb.	207.00
ICPM__PAQ	Quick Disconnect Adapter	1 lb.	131.00	1 lb.	138.00
ICPM__PAL5	__" x 5" Liner Adapter	1 lb.	98.00	1 lb.	98.00
ICPM__PAM	Masonry Adapter	3 lbs.	197.00	1 lb.	214.00
ICPM__PAS	Stove Adapter	1 lb.	53.00	1 lb.	62.00
ICPM__PCH	Horizontal Cap	2 lbs.	129.00	2 lbs.	138.00
ICPM__PCJ	Adjustable Jet Cap	2 lbs.	136.00	2 lbs.	148.00
ICPM__PCR	Vertical Rain Cap	2 lbs.	164.00	2 lbs.	169.00
ICPM__PCE	Economy Cap	1 lb.	TBD	1 lb.	TBD
ICPM__PCS	Spark Screen	1 lb.	86.00	1 lb.	86.00
ICPMPRCS	Vertical Cap Spark Screen	-	50.00	-	-
ICPM__PSA	Ceiling Support/Radiation Shield	5 lbs.	183.00	6 lbs.	209.00
ICPM__PSC	Storm Collar	1 lb.	31.00	1 lb.	36.00
ICPM__PSG	Silicone Gasket	1 lb.	N/C	1 lb.	N/C
ICPM__PSS	Square Support/Radiation Shield	8 lbs.	250.00	8 lbs.	273.00
ICPM__PWT	Adjustable Wall Thimble	5 lbs.	195.00	5 lbs.	209.00
ICPM__PWTE	Wall Thimble Extension	4 lbs.	131.00	4 lbs.	162.00*
ICPM__PWTOC	Wall Thimble with Outside Air	9 lbs.	970.00	-	970.00*
ICPM__PWTOI	Wall Thimble Integrated	5 lbs.	416.00	6 lbs.	416.00
ICPM4PCT	4" Traditional Coaxial	-	-	3 lbs.	508.00
ICPM__PFG	Flat Gasket	1 lb.	N/C	1 lb.	N/C
ICPM3PAT3	3" Stove Adapter Tee, Galvalume	2 lbs.	242.00	-	-
ICPM3PAT3B	3" Stove Adapter Tee, Black	2 lbs.	264.00*	-	-
ICPM3PAT4	3" to 4" Stove Adapter Tee	3 lbs.	283.00	-	-
ICPM3PI4	3"-4" Tapered Stove Adapter	1 lb.	169.00	-	-
ICPM3PI4B	3"-4" Tapered Stove Adapter Black		190.00	-	-
ICPM3PAF4	3" - 4" Flex Adapter	1 lb.	157.00	-	-
ICPM4PATF4	4" Flex Adapter Tee	-	-	1 lb.	167.00
ICPM3PATF4	3" - 4" Flex Adapter Tee	1 lb.	152.00	-	-
ICPM3PIT4	3" - 4" Tapered Increaser, Galvalume	1 lb.	157.00	-	-
ICPM3PIT4B	3" - 4" Tapered Increaser, Black	1 lb.	190.00*	-	-
ICPMPRCW	3" & 4" Wind/Rain Shield	1 lb.	81.00	-	-
ICPMPSW	3" & 4" Adjustable Wall Support	2 lbs.	60.00	-	-
ICPMPTMP	3" & 4" Template	1 lb.	50.00	-	-
ICPM3PASH	Harman Stove Adapter	3 lbs.	60.00	-	-
ICPM3PASH6	Harman 6" Stove Adapter	4 lbs.	86.00	-	-
ICPMHG	Harman Style Gasket - For Use w/Harman Stove Adapter	1 lb.	27.00	-	-

Industrial Chimney Company

EXCELiner Rigid Liner

EXCELiner is designed and approved to replace clay tile liners which have become cracked from age, misuse or damaged by chimney fires. EXCELiner can be used to reline masonry chimneys which have deteriorated due to chimney fires, spalled tiles, moisture damage or eroded mortar joints.

By reducing the chimney to the correct size for the appliance, EXCELiner improves draft, reduces fuel consumption and helps insure consistent operation. There is less creosote formation in a properly sized flue which decreases the probability of a chimney fire.

EXCELiner is listed to UL and ULC standards by Warnock Hersey Professional Services to be used as stainless steel liner in a new chimney, instead of a clay tile liner. Unlike clay tile liners, EXCELiner can withstand chimney fires without damage and comes with a lifetime warranty.

EXCELiner has continuous welded seams which means no leaks and no possibility of seam separation. All stainless steel components are made of type 304 stainless steel with factory hemmed ends for smooth, safe surfaces. No drilling is required. EXCELiner comes with pre-punched holes and all stainless steel rivets provided with each liner section.

To order, enter the appropriate chimney diameter size into the item number.

Chimney Lengths						
For stock status, please visit order.aes4home.com or call 800-682-9722						
Item No.	*Description*	*5”*	*5.5"*	*6”*	*7”*	*8”*
ICLC__LL4	48” Length	$169.00	$169.00*	$169.00	$195.00	$225.00
ICLC__LL3	36” Length	144.00	144.00*	144.00	167.00	191.00
ICLC__LL2	24” Length	122.00	122.00*	122.00	152.00	167.00
ICLC__LL1	12” Length	71.00	71.00*	71.00	84.00	102.00
ICLC__LLA1	12” Adjustable Length	71.00*	71.00*	71.00	84.00	102.00
ICLC__LLA3	36" Adjustable Length	144.00*	144.00*	144.00	167.00	191.00
Tees and Elbows						
ICLE__LT	90° Split Base Tee w/out Tee Cap	$154.00*	$164.00*	$164.00	$172.00	$185.00
ICLE__LTA	Adjustable Snout Tee w/out Tee Cap	209.00*	220.00*	220.00	230.00	248.00
ICLE__LTC	Tee Cap	49.00*	57.00	57.00	59.00	74.00
ICLE__LE30	30° Elbow	94.00*	104.00*	104.00	112.00	130.00
ICLE__LE45	45° Elbow	109.00*	112.00*	112.00	126.00	144.00
ICLE__LE90	90° Elbow	132.00*	136.00*	136.00	154.00	175.00
ICLE__LEA90	90° Adjustable Elbow	202.00*	157.00*	215.00	230.00	259.00
ICLE__LTL	Twist Lock Tee	212.00*	217.00*	225.00*	240.00*	264.00*
ICLM6LAF5	Appliance Adapter - 6" Flue to 5" Flex	-	-	94.00	-	-
ICLM6LAF55	Appliance Adapter - 6" Flue to 5.5" Flex	-	-	94.00	-	-
Supports						
ICLM__LSB	Galvanized Base Support w/Storm Collar	$136.00*	$136.00*	$136.00*	$136.00	$136.00
ICLM__LSA	Stainless Top Support 16" x 16" w/Storm Collar	258.00*	264.00*	264.00	280.00	290.00
ICLM__LSAL	Stainless Top Support 24" x 24" w/Storm Collar	343.00*	358.00*	358.00	376.00	388.00
ICLM__LSAG	Galvanized Top Support 16" x 16" w/Storm Collar	149.00*	157.00*	157.00	167.00	181.00
ICLM__LSAGL	Galvanized Top Support 24" x 24" w/Storm Collar	258.00*	264.00*	264.00	280.00	290.00*

Industrial Chimney Company

EXCELiner Rigid Liner

Caps and Adapters						
For stock status, please visit order.aes4home.com or call 800-682-9722						
Item No.	*Description*	*5”*	*5.5”*	*6”*	*7”*	*8”*
ICLM__LSASC	Storm Collar	$51.00	-	$57.00	$59.00	$69.00
ICLM__LCR	Regular Rain Cap	130.00*	139.00	139.00	144.00	154.00
ICLM__LCD	Deluxe Rain Cap	164.00*	175.00	175.00	202.00	212.00
ICLM__LAF	Flex Liner Adapter	91.00*	94.00	94.00	104.00	120.00
ICLM__LAF90	90° Adjustable Flex Adapter	205.00*	205.00	215.00	227.00	262.00
ICLM__ITH	Insulated Thimble	521.00*	-	521.00	567.00	609.00
ICLMLR65	Reducer 6” - 5”	122.00*	-	-	-	-
ICLMLR76	Reducer 7” - 6”	136.00*	-	-	-	-
ICLMLR87	Reducer 8” - 7”	149.00*	-	-	-	-
ICLMLI56	Increaser 5” - 6”	122.00*	-	-	-	-
ICLMLI67	Increaser 6” - 7”	136.00*	-	-	-	-
ICLMLI78	Increaser 7” - 8"	149.00*	-	-	-	-

Industrial Chimney Company

EXCEL Direct Vent

Construction/Performance

EXCEL Direct features a stainless steel flue and satin coat outer casing. Both the flue and casing are continuously laser welded insuring they are always perfectly round. The precision tapered coupling system is formed directly onto the male and female end of each tube.

This precision coupling system, combined with precision laster welded construction enables EXCEL Direct to accomplish two important performance objectives:

•The EXCEL Direct system is the most airtight, leak-free system in the industry.

•The EXCEL Direct system is the fastest and easiest system to install.

The lengths fit together effortlessly and are fastened with three small screws through pre-punched holes.

Terminations

There are three different terminations (two horizontal, one vertical), plus snorkel options. These terminations are sufficient to do any installation and cut down on SKU's. Builders and homeowners have told us they don't want to emphasize terminations, they want them to disappear. Out terminations are attractive, perform as well or better than the other guys in all wind conditions and can be painted to match the house. A slip section is integrated into every horizontal termination.

Appearance

The tapered coupling system, combined with laser welded lengths provide a clean smooth appearance to the galvalume exterior.

Laser welding, smooth couplings and the high quality Forrest Paint finish provide an unmatched appearance to our black painted components making it the ideal choice for freestanding applications.

Appliance Compatibility

EXCEL Direct has been designed to fit all appliance using 4/6 and 5/7 diameter vents including those which come with DuraVent adapters factory installed.

EXCEL Direct is tested to UL 2112 Standards.

Type A Chimney Adapter

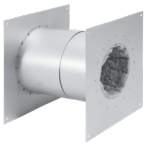
Insulated Wall Thimble

Flex Liner Connector

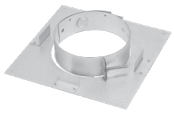
Ceiling Support/Firestop

Galvalume Pipe Length

Coaxial to Colinear Adapter

Black 45º/90º Elbows

Vertical Termination

Snorkel Termination

4" EXCEL Direct
(4" I.D. - 6 1/2" O.D.)

4" Galvanized Lengths and Elbows				
Item No.	*Description*	*Wt./Cs.*	*Retail*	*Stocked*
ICTC4DL6	6" Galvalume Length	2 lbs.	$69.00	Y
ICTC4DL9	9" Galvalume Length		76.00	Y
ICTC4DL1	12" Galvalume Length	3 lbs.	88.00	Y
ICTC4DL16	16” Galvalume Length		109.00	Y
ICTC4DL2	24" Galvalume Length	4 lbs.	120.00	Y
ICTC4DL3	36' Galvalume Length		149.00	Y
ICTC4DL4	48" Galvalume Length	8 lbs.	173.00	Y
ICTC4DLA30	18"-30" Adjustable Length		158.00	Y
ICTC4DLS1	12" Galvalume Slip Length		88.00	Y
ICTC4DLS2	24" Galvalume Slip Length		120.00	Y
ICTE4DE30	Galvalume 30° Elbow	2 lbs.	117.00	Y
ICTE4DE45	Galvalume 45° Elbow	3 lbs.	117.00	Y
ICTE4DE90	Galvalume 90° Elbow	3 lbs.	141.00	Y
4" Black Lengths and Elbows				
ICTC4DL6B	6" Black Length	2 lbs.	$117.00	Y
ICTC4DL9B	9” Black Length		117.00	Y
ICTC4DL1B	12" Black Length	3 lbs.	129.00	Y
ICTC4DL16B	16” Black Length		142.00	Y
ICTC4DL2B	24" Black Length	4 lbs.	168.00	Y
ICTC4DL3B	36' Black Length		207.00	Y
ICTC4DL4B	48" Black Length	9 lbs.	246.00	Y
ICTC4DLA30B	18"-30" Adjustable Black Length		239.00	Y
ICTC4DLS1B	12" Black Slip Length		129.00	Y
ICTC4DLS2B	24" Black Slip Length		168.00	Y
ICTE4DE30B	Black 30° Elbow		154.00	Y
ICTE4DE45B	Black 45° Elbow	3 lbs.	154.00	Y
ICTE4DE90B	Black 90° Elbow	3 lbs.	180.00	Y
ICTE4DE90S	90° Slip Elbow		195.00	Y
ICTE4DE90SB	Black 90° Slip Elbow		260.00	Y
4" Supports and Firestops				
ICTM4SS	Square Support/Radiation Shield	13 lbs.	$291.00	Y
ICTM4RDS	Round Support/Radiation Shield	8 lbs.	241.00	Y
ICTM4CS	Ceiling Support/Firestop	2 lbs.	78.00	Y
ICTM4WT	Insulated Wall Thimble (Can be Used in 2x4 Wall)	6 lbs.	162.00	Y
ICTM4AS	Attic Radiation Shield/Firestop	7 lbs.	209.00	Y
ICTM4HTK	Horizontal Termination Kit		1,035.00	Y
ICTM4TP	4 DV Trim Plate Black		42.00	Y
ICTM4WTE	4 DV Wall Thimble Extension		154.00	Y
ICTMWS	4" & 5" Adjustable Wall Support	2 lbs.	56.00	Y
ICTMOS	4" & 5" Offset Support	1 lb.	44.00	Y
ICTM4TR	Black Round Trim Ring	4 lbs.	52.00	Y

Deluxe Horizontal Termination

Trim Ring

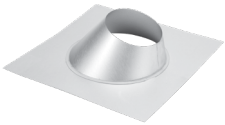
Adjustable Flashing

Square Support/Radiation Shield

Offset Support

Galvalume 45º/90º Elbows

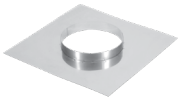
Masonry Chimney Flashing

Industrial Chimney Company

4" EXCEL Direct - (4" I.D. - 6 1/2" O.D.)

4" Caps, Flashings and Adapters

Item No.	*Description*	*Wt./Cs.*	*Retail*	*Stocked*
ICTM4OR	O Ring		$13.00	N
ICPM4PCT	4" Traditional Coaxial Chimney Cap		508.00	N
ICTMCT3	DV Traditional Co-Linear Chimney Cap - 3 x 3 - Traditional Caps Require a Flashing (ICTFCTF or ICTFCTFC, shown on this page)		435.00	Y
ICTMCT4	DV Traditional Co-Linear Chimney Cap - 4 x 3 - Traditional Caps Require a Flashing (ICTFCTF or ICTFCTFC, shown on this page)	8 lbs.	435.00	Y
ICTM4SVT	Small Vertical Termination - Stainless Steel		268.00	Y
ICTM4HT	Horizontal Termination w/5" Adj.	8 lbs.	384.00	Y
ICTM4RHT	4" Round Horizontal Termination Cap *(Replaced by Low Restriction Horizontal Termination ICTM4LRHT)*		469.00	LTSD
NEW ICTM4LRHT	4" Low Restriction Horizontal Termination Cap - *Includes Optional Heat Deflector (protects vinyl siding)*	7 lbs.	510.00	Y
ICTM4DHT	Deluxe Horizontal Termination w/5" Adj.	9 lbs.	469.00	LTSD
ICTM4ST14	14" Snorkel Termination	18 lbs.	1,278.00	Y
ICTM4SVTS	Rain/Wind Shield for SVT		129.00	Y
ICTM4ST36	36" Snorkel Termination	25 lbs.	1,475.00	Y
ICTMIVT	4" & 5" Insert Vertical Termination (ICTF4MF required)	5 lbs.	409.00	Y
ICTMIVTP	Prefab Chimney Top Adapter		120.00	Y
ICTF4F	Flat Flashing	3 lbs.	154.00	Y
ICTF4FA	Adjustable Flashing 1/12 - 6/12	3 lbs.	122.00	Y
ICTF4FB	Adjustable Flashing 7/12 - 12/12	4 lbs.	183.00	Y
ICTFCTF	Universal Flashing - Rectangular Opening		66.00	Y
ICTFMFR	Universal Flashing - Round Opening		66.00	Y
ICTFCTFC	Clay Tile Flashing - Rectangular Opening		93.00	Y
ICTFMFC	Clay Tile Flashing - Round Opening		93.00	Y
ICTMHC	Hose Clamp Bracket - Use w/Clay Tile Flashing		66.00	Y
ICTF4MF	Masonry Chimney Flashing	1 lb.	129.00	Y
ICTMSC	4" & 5" Storm Collar	2 lbs.	32.00	Y
ICTM4RD	Restrictor Disk	1 lb.	18.00	Y
ICTMVSS	4" & 5" Vinyl Siding Standoff	3 lbs.	129.00	Y
ICTM4CAA	4" Coaxial to Colinear Appliance Adapter	3 lbs.	379.00	Y
ICTM4CA6	4" x 6" Type A Chimney Adapter	4 lbs.	496.00	Y
ICTM4CA7	4" x 7" Type A Chimney Adapter	4 lbs.	496.00	Y
ICTM4CA8	4" x 8" Type A Chimney Adapter	4 lbs.	496.00	Y
ICTMCFAA3	4" & 5" Flex Liner Connector 3"	1 lb.	88.00	Y
ICTM4AA1	4" Vermont Castings Adapter	1 lb.	115.00	Y
ICTM4AA2	4" Valor Adapter	1 lb.	90.00	Y
ICTM4AA3	4" Napoleon Adapter	1 lb.	105.00	Y
ICTM4AA4	4" Kingsman Adapter	1 lb.	253.00	LTSD
ICTM4AA6	4" Archgard Adapter	1 lb.	90.00	Y
ICTM4AA7	4" x 7" Regency Adapter	1 lb.	100.00	Y
ICTMCTS	4" & 5" Wind/Rain Shield - Traditional Caps		134.00	Y
ICTMCFAA4	Flex Liner Connector - 4"		93.00	Y
ICTM4CFA	4" x 7" Enviro Coaxial Flex Adapter - Flex not Included		308.00	Y
ICUM6UBTR	Adjustable 6" Conical Trim Ring		33.00	Y
ICUM8UBTR	Adjustable 8" Conical Trim Ring		42.00	Y

Round Support/Radiation Shield

Black Pipe Length

Horizontal Termination

Attic Radiation Shield

Adjustable Wall Support

Storm Collar

Industrial Chimney Company

5" EXCEL Direct - (5" I.D. - 7 7/8" O.D.)

5" Galvanized Lengths and Elbows				
Item No.	*Description*	*Wt./Cs.*	*Retail*	*Stocked*
ICTC5DL6	6" Galvalume Length	2 lbs.	$78.00	Y
ICTC5DL9	9" Galvalume Length	2 lbs.	90.00	Y
ICTC5DL1	12" Galvalume Length	3 lbs.	103.00	Y
ICTC5DL2	24" Galvalume Length	5 lbs.	141.00	Y
ICTC5DL3	36" Galvalume Length		180.00	Y
ICTC5DL4	48" Galvalume Length	10 lbs.	205.00	Y
ICTC5DLS1	12" Galvalume Slip Length		103.00	Y
ICTC5DLS2	24" Galvalume Slip Length		141.00	Y
ICTC5DLA30	18"-30" Adjustable Galvalume Length		195.00	Y
ICTE5DE30	Galvalume 30° Elbow	2 lbs.	144.00	Y
ICTE5DE45	Galvalume 45° Elbow	3 lbs.	144.00	Y
ICTE5DE90	Galvalume 90° Elbow	4 lbs.	168.00	Y
ICTE5DE90S	Galvalume 90° Slip Elbow		229.00	Y
5" Black Lengths and Elbows				
ICTC5DL6B	6" Black Length	2 lbs.	$137.00	Y
ICTC5DL9B	9" Black Length	2 lbs.	137.00	Y
ICTC5DL1B	12" Black Length	3 lbs.	149.00	Y
ICTC5DL2B	24" Black Length	6 lbs.	197.00	Y
ICTC5DL3B	36" Black Length		241.00	Y
ICTC5DL4B	48" Black Length	11 lbs.	285.00	Y
ICTC5DLA30B	18"-30" Adjustable Black Length		290.00	Y
ICTC5DLS1B	12" Black Slip Length		149.00	Y
ICTC5DLS2B	24" Black Slip Length		197.00	Y
ICTE5DE45B	Black 45° Elbow	3 lbs.	209.00	Y
ICTE5DE90B	Black 90° Elbow	4 lbs.	248.00	Y
5" Supports and Firestops				
ICTM5SS	Square Support/Radiation Shield	16 lbs.	$336.00	Y
ICTM5RDS	Round Support/Radiation Shield	9 lbs.	297.00	Y
ICTM5CS	Ceiling Support/Firestop	3 lbs.	90.00	Y
ICTM5WT	Insulated Wall Thimble (Can be Used in 2x4 Wall)	6 lbs.	212.00	Y
ICTM5WTE	Wall Thimble Extension		175.00	Y
ICTM5AS	Attic Radiation Shield/Firestop	7 lbs.	260.00	Y
ICTMWS	4" & 5" Adjustable Wall Support	2 lbs.	56.00	Y
ICTMOS	4" & 5" Offset Support	1 lb.	44.00	Y
ICTM5TR	Black Trim Ring	4 lbs.	64.00	Y
ICTM5TP	Black Trim Plate		44.00	Y
5x8 Flashings				
ICXF6EF	Flat 2/12 Pitch		$183.00	N
ICXF6EFA	1/12 - 7/12 Pitch		183.00	N
ICXF6EFB	8/12 - 12/12 Pitch		194.00	N

Industrial Chimney Company

5" EXCEL Direct - (5" I.D. - 7 7/8" O.D.)

5" Caps, Flashings, Adapters & Other				
Item No.	*Description*	*Wt./Cs.*	*Retail*	*Stocked*
ICTM5SVT	Small Vertical Termination - Stainless Steel		$341.00	Y
ICTM5HT	Horizontal Termination w/5" Adj.	9 lbs.	486.00	Y
ICTM5RHT	Round Horizontal Termination *(Replaced by Low Restriction Horizontal Termination ICTM5LRHT)*		540.00	LTSD
NEW ICTM5LRHT	5" Low Restriction Horizontal Termination Cap - *Includes Optional Heat Deflector (protects vinyl siding)*	8 lbs.	579.00	Y
ICTM5ST36	36" Snorkel Termination	25 lbs.	1,618.00	Y
ICTMIVT	4" & 5" Insert Vertical Termination	5 lbs.	409.00	Y
ICXF6EF	Flat Flashing	6 lbs.	183.00	Y
ICXF6EFA	Adjustable Flashing 1/12 - 6/12	6 lbs.	183.00	Y
ICXF6EFB	Adjustable Flashing 7/12 - 12/12	8 lbs.	194.00	Y
ICTMSC	4" & 5" Storm Collar	2 lbs.	32.00	Y
ICTMSQSC	4" & 5" Storm Collar for Square Support	2 lbs.	39.00	Y
ICTMCFAA3	4" & 5" Flex Liner Connector 3"	1 lb.	88.00	Y
ICTMVSS	4" & 5" Vinyl Siding Standoff	3 lbs.	129.00	Y
ICTMR54	Direct Vent 5"-4" Reducer		156.00	Y
ICTMMA	Masonry Adapter		224.00	Y
ICTMMTA	Masonry Termination Adapter		180.00	Y
ICTMCTA	Co-Linear Termination Adapter		328.00	Y
ICTM5TA1	Termination Adapter - Montigo		83.00	Y
ICTM5AA6	Adapter 5" x 8" - Montigo		90.00	Y
ICTM5AA1	5" Kingsman Adapter		180.00	Y
ICTM5AA3	5" x 8" Regency Adapter		103.00	Y
ICTM5AA4	5'' x 4'' Regency Adapter		93.00	N
ICTMCTS	4" & 5" Wind/Rain Shield - Traditional Caps		134.00	Y
ICTM5HTS	Horizontal Wind Shield		166.00	Y
ICTM5CFA	5" x 8" Enviro Coaxial Flex Adapter		328.00	Y
ICTM5AA7	5'' x 7'' Regency Adapter	1 lb.	64.00	N
ICTM5AA8	5"x8" Faber Adapter	1.3 lbs.	103.00	N
Flex Kits				
ICTMALK33	Standard 3" x 3" Co-Linear Flex Kit - Includes (x2) 35ft Lengths, S/S Round High Wind Cap, S/S Flashing		$795.00	Y
ICTMALK43	Standard 4" x 3" Co-Linear Flex Kit - Includes (x2) 35ft Lengths, S/S Round High Wind Cap, S/S Flashing		839.00	Y
ICTMALT33	Traditional 3" x 3" Co-Linear Flex Kit - Includes (x2) 35ft Lengths, S/S Rectangular Cap, Galvalume Flashing		795.00	Y
ICTMALT43	Traditional 4" x 3" Co-Linear Flex Kit - Includes (x2) 35ft Lengths, S/S Rectangular Cap, Galvalume Flashing		839.00	Y
ICTMALC4	Masonry Chimney Conversion Kit		795.00	Y
ICTC3AL35	3" x 35' Aluminum Flex Roll		282.00	Y
ICTC4AL35	4" x 35' Aluminum Flex Roll		409.00	Y
ICTC3AL50	3" x 50' Aluminum Flex Roll		460.00	Y
ICTC4AL50	4" x 50' Aluminum Flex Roll		639.00	Y
ICTMALH	Horizontal Vent Kit - Includes Two 5' Lengths of 3'' Flex, Four Hose Clamps and a Firestop/Template for the Wall - Compatible with Enviro Q1 Gas Insert Glass and Log Models		493.00	Y

Deluxe Horizontal Termination

Trim Ring

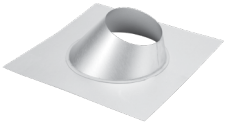

Adjustable Flashing

Square Support/Radiation Shield

Offset Support

Galvalume 45º/90º Elbows

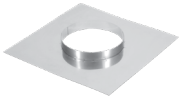

Masonry Chimney Flashing

Industrial Chimney Company

Excel Direct Power Vent (3x5)

EXCEL Direct Power Vent is the essential solution to pressurized direct vent systems. Ideal for direct vent appliances with a power termination or in-line fan. It is listed to a higher temperature rating than other brands and has the tightest seals on the market.

No taping of joints or sealants are required, and it arrives clean without lubricant on the gaskets. Just fast, easy, clean assembly.

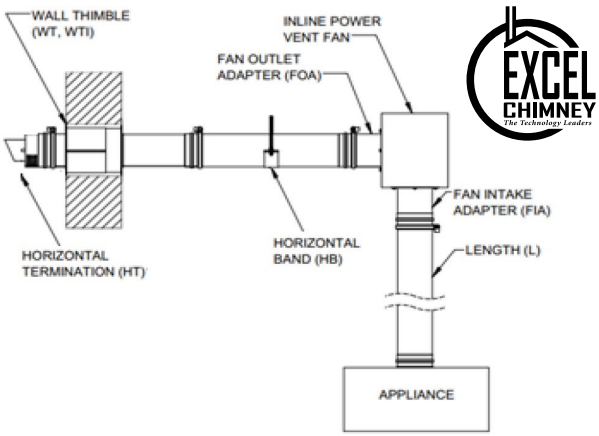

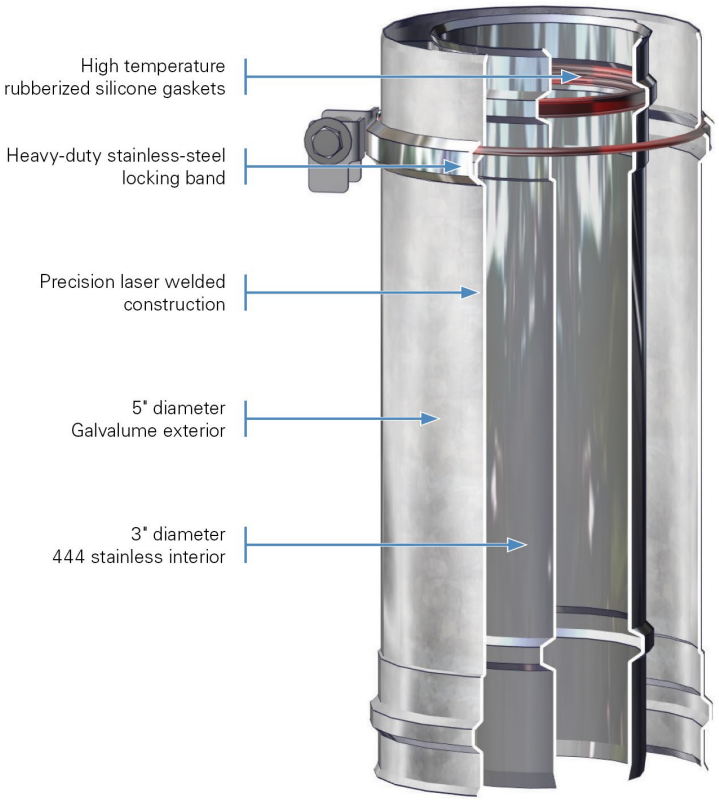

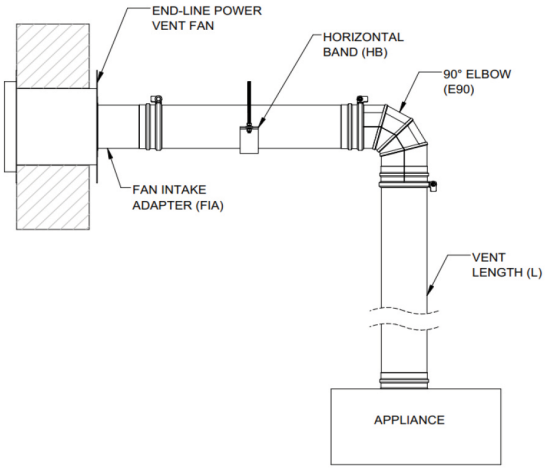

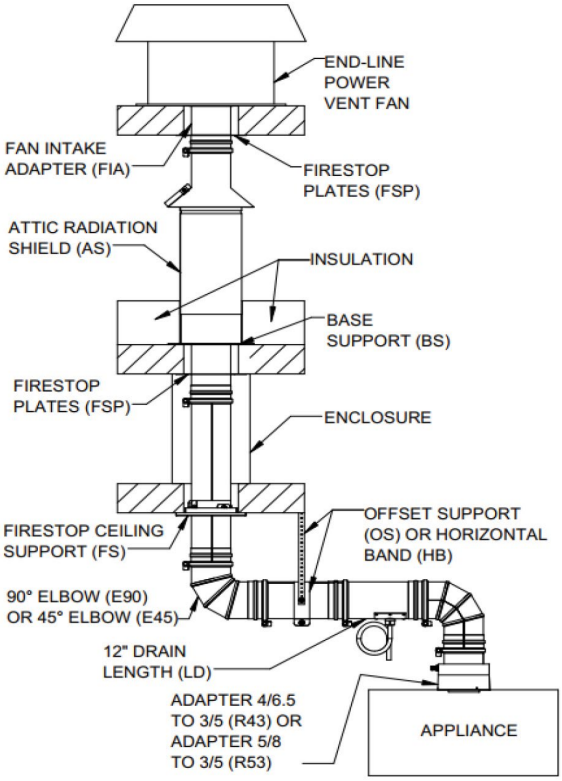

Industrial Chimney Company

Excel Direct Power Vent (3x5)

OR Symbol means required components for Ortal Fireplaces installations.

All required components are specific to a particular venting configuration - either **Flush Mount** or **Inline**. See next pages for detailed "steps" and images for additional help.

Power Vent Lengths				
Item No.	*Description*	*Wt./Cs.*	*Retail*	*Stocked*
ICTU35DPL6	6" Length	-	$90.00	Y
ICTU35DPL1	12" Length	-	127.00	Y
ICTU35DPL2	24" Length	-	142.00	Y
ICTU35DPL3	36" Length	-	172.00	Y
ICTU35DPL4	48'' Length	-	201.00	Y
ICTU35DPLD	12" Length with drain	-	290.00	Y
ICTU35DPLS1	12" Slip Length	-	157.00	Y
ICTU35DPLS2	24" Slip Length	-	224.00	Y
Power Vent Elbows				
ICTV35DPE30	Elbow 30º	-	$186.00	N
ICTV35DPE45	Elbow 45º	-	194.00	Y
ICTV35DPE90	Elbow 90º	-	215.00	Y
Power Vent Supports & Firestops				
ICTX35DPWT	Wall Thimble	-	$186.00	Y
ICTX35DPWTI	Insulated Wall Thimble	-	261.00	Y
ICTX35DPFS	Firestop Ceiling Support	-	90.00	Y
ICTX35DPFSP	Firestop Plates	-	27.00	Y
ICTX35DPBS	Base Support	-	112.00	Y
ICTX35DPWS	Wall Support	-	105.00	Y
ICTX35DPOS	Offset Support	-	45.00	Y
ICTX35DPSR	Roof Support	-	82.00	Y
ICTX35DPHB	Horizontal Band	-	33.00	Y
ICTX35DPAS	Attic Radiation Shield	-	186.00	Y
Power Vent Terminations				
ICTX35DPHT OR	Horizontal Termination **(Ref# on Guide - D1)**	-	$164.00	Y
ICTX35DPVT OR	Vertical Termination **(Ref# on Guide - D2)**	-	186.00	Y

Example (right)

Complete Ortal Components Guide on Following Pages

D1 or D2

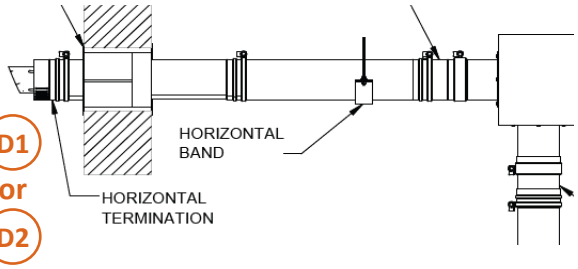

Industrial Chimney Company

Excel Direct Power Vent (3x5)

Power Vent Flashings and Collars				
Item No.	*Description*	*Wt./Cs.*	*Retail*	*Stocked*
ICTW35DPF	Flat Flashing	-	$82.00	Y
ICTW35DPFA	Flat Flashing 1/12-7/12	-	82.00	Y
ICTW35DPFB	Flat Flashing 8/12-12/12	-	90.00	Y
ICTW35DPSC	Storm Collar	-	27.00	Y
Power Vent Accessories				
ICTX35DPR43DP OR	Appliance Adapter 4/6.5 to 3/5 **(Ref# on Guide - A1)**	-	$257.00	Y
ICTX35DPR53DP OR	Appliance Adapter 5/8 to 3/5 **(Ref# on Guide - A2)**	-	273.00	Y
ICTX35DPFAD OR	Universal Female Fan Adapter **(Ref# on Guide - B1)**	-	134.00	Y
ICTX35DPFIA OR	Fan Intake Adapter **(Ref# on Guide - B2)**	-	112.00	Y
ICTX35DPMAD OR	Universal Male Adapter **(Ref# on Guide - C1)**	-	149.00	Y
ICTX35DPFOA OR	Fan Outlet Adapter **(Ref# on Guide - C2)**	-	127.00	Y
ICTX35DPLB	Locking Band	-	23.00	Y

OR Symbol means required components for Ortal Fireplaces installations.

All required components are specific to a particular venting configuration - either **Flush Mount** or **Inline**. See next pages for detailed "steps" and images for additional help.

Example (right)

Complete Ortal Components Guide on Following Pages

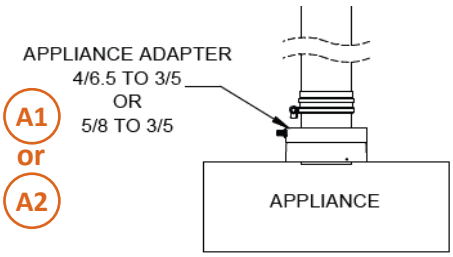

EXCELDirect Power Vent®

Required Components For Ortal Fireplaces

Flush Mount and Vertical Power Vent Installations

	Part code	Part name	Description	Visual
	1. Choose the appliance adapter required			
A1	TX-35DPR43	Appliance adapter 4x6 5/8	Use the DPR43 to connect to appliances with a 4" x 6 5/8" flue collar	
	or			
A2	TX-35DPR53	Appliance adapter 5/8	Use the DPR53 to connect to appliances with a 5" x 8" flue collar	
	2. Fan Adapter Required			
B1	TX-35DPFAD	ICC/CVS Female adapter	An adapter is required to transition to the intake side of the Ortal power vent fan. Attaches to the Duravent CVS® fitting installed on the fan.	
	or			
B2	TX-35DPFIA	Fan intake adapter	For use on a PV fan when space is tight. **Remove the Duravent adapter and install this one**.	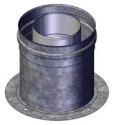

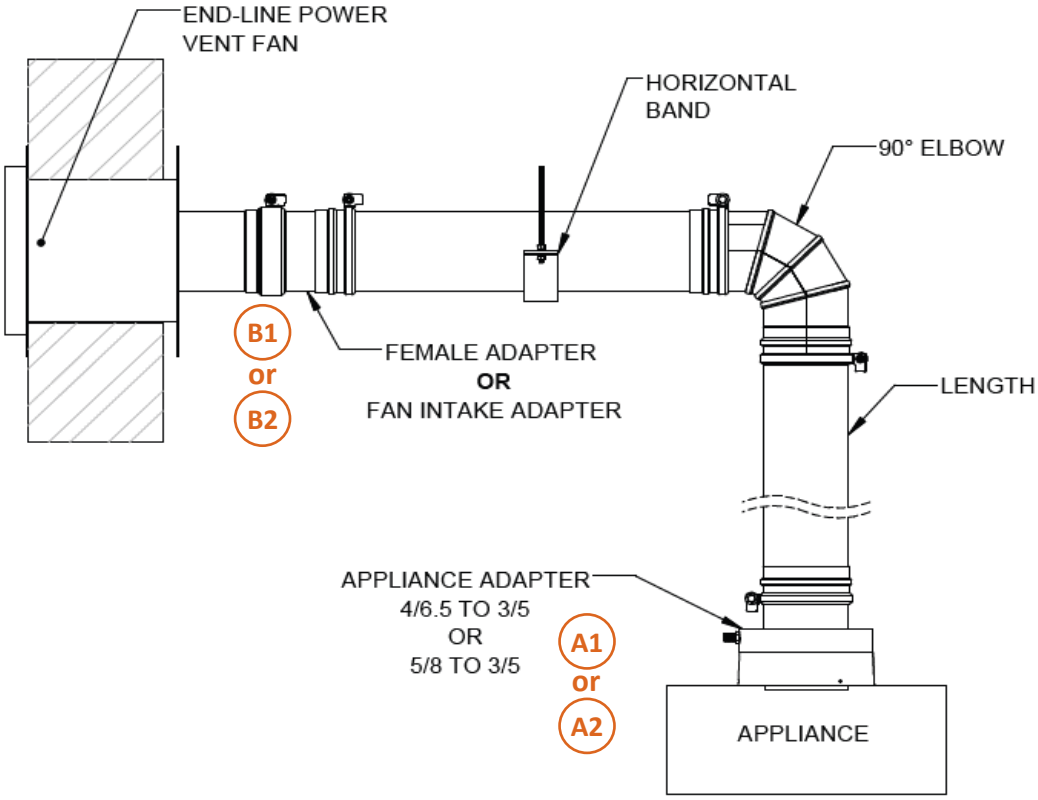

Inline 180 and Inline 90 Power Vent Installations

	Part code	Part name	Description	Visual
	1. Choose the appliance adapter required			
A1	TX-35DPR43	Appliance adapter 4x6 5/8	Use the DPR43 to connect to appliances with a 4" x 6 5/8" flue collar	
	or			
A2	TX-35DPR53	Appliance adapter 5/8	Use the DPR53 to connect to appliances with a 5" x 8" flue collar	
	2. Choose the adapter to connect to the fan intake			
B1	TX-35DPFAD	ICC/CVS Female adapter	An adapter is required to transition to the intake side of the Ortal power vent fan. Attaches to the Duravent CVS® fitting installed on the fan.	
	or			
B2	**TX-35DPFIA**	Fan intake adapter	For use on a PV fan when space is tight. **Remove the Duravent adapter and install this one**	
	3. Choose the adapter to connect to the fan outlet			
C1	TX-35DPMAD	CVS/ICC Male adapter	An adapter is required to transition to the outlet side of the Ortal power vent fan. **Attaches to the Duravent CVS® fitting installed on the fan.**	
	or			
C2	TX-35DPFOA	Fan outlet adapter	For use on a PV fan when space is tight. **Remove the Duravent adapter and install this one**.	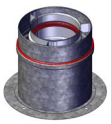
	4. Choose a termination			
D1	TX-35DPHT	Horizontal Termination	Required if terminating horizontally.	
	or			
D2	TX-35DPVT	Vertical Termination	Required if terminating vertically.	

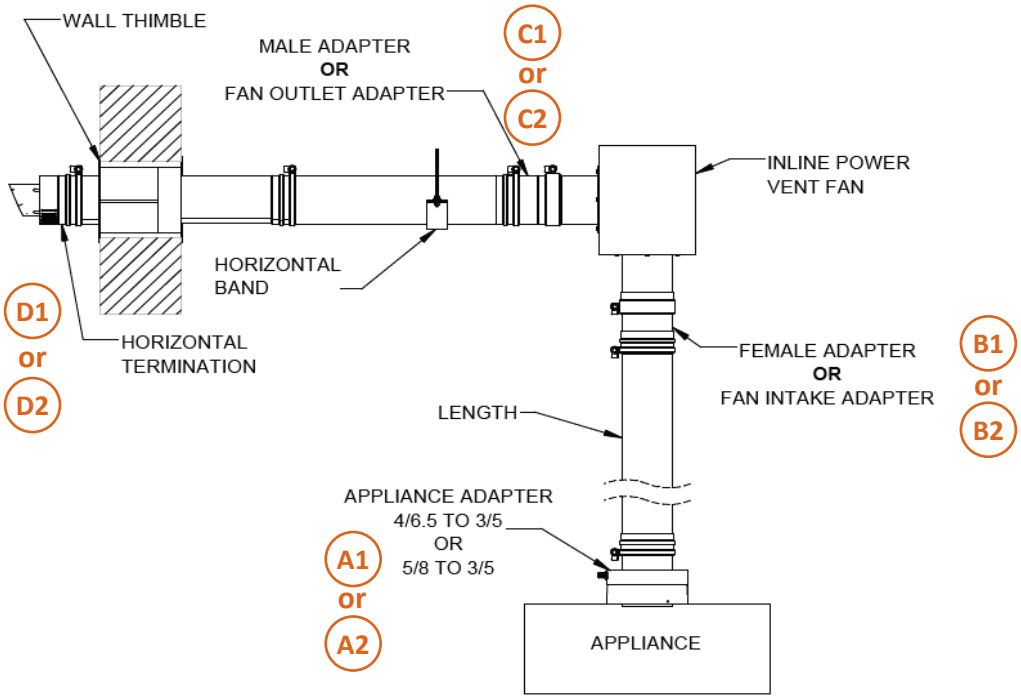

EXCELDirect Power Vent® vs CVS®

Lengths	EXCELDirect Power Vent	Duravent CVS
6" Length	**TU-35DPL6**	35CVS-06
12" Length	**TU-35DPL1**	35CVS-12
24" Length	**TU-35DPL2**	35CVS-24
36" Length	**TU-35DPL3**	35CVS-36
48" Length	**TU-35DPL4**	N/A
12" Length with drain	**TU-35DPLD**	35CVS-CD
12" Slip Length	**TU-35DPLS1**	35CVS-12TA
24" Slip Length	**TU-35DPLS2**	N/A
Elbows	**EXCELDirect Power Vent**	**Duravent CVS**
Elbow 45º	**TV-35DPE45**	35CVS-E45
Elbow 90º	**TV-35DPE90**	35CVS-E90
Supports & Firestops	**EXCELDirect Power Vent**	**Duravent CVS**
Wall Thimble	**TX-35DPWT**	35CVS-WT
Insulated Wall Thimble	**TX-35DPWTI**	35CVS-WTP
Firestop Ceiling Support	**TX-35DPFS**	35CVS-FS
Firestop Plates	**TX-35DPFSP**	N/A
Base Support	**TX-35DPBS**	N/A
Wall Support	**TX-35DPWS**	35CVS-WS
Offset Support	**TX-35DPOS**	N/A
Roof Support	**TX-35DPSR**	35CVS-RS
Horizontal Band	**TX-35DPHB**	N/A
Attic Radiation Shield	**TX-35DPAS**	35CVS-IS
Terminations	**EXCELDirect Power Vent**	**Duravent CVS**
Horizontal Termination	**TX-35DPHT**	35CVS-HCR
Vertical Termination	**TX-35DPVT**	35CVS-VC
Flashings and Collars	**EXCELDirect Power Vent**	**Duravent CVS**
Flat Flashing	**TW-35DPF**	N/A
Flat Flashing 1/12-7/12	**TW-35DPFA**	35CVS-F
Flat Flashing 8/12-12/12	**TW-35DPFB**	35CVS-F
Storm Collar	**TW-35DPSC**	35CVS-SC
Accessories	**EXCELDirect Power Vent**	**Duravent CVS**
Fan Intake Adapter	**TX-35DPFIA**	N/A
ICC/CVS Female Adapter	**TX-35DPFAD**	N/A
Fan Outlet Adapter	**TX-35DPFOA**	N/A
CVS/ICC Male Adapter	**TX-35DPMAD**	N/A
Adapter 4/6.5 to 3/5	**TX-35DPR43**	SASSMADP-4/6
Adapter 5/8 to 3/5	**TX-35DPR53**	SASSMADP-5/8
Locking Band	**TX-35DPLB**	N/A
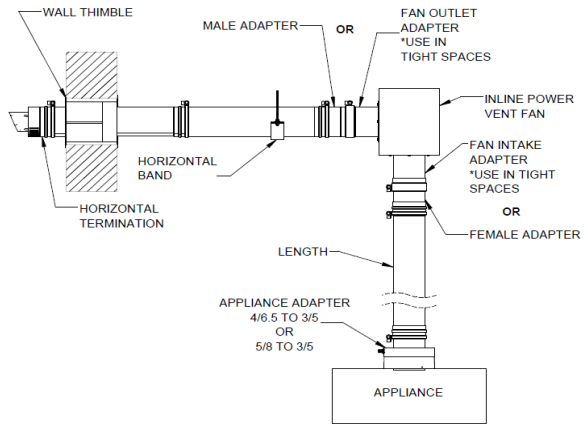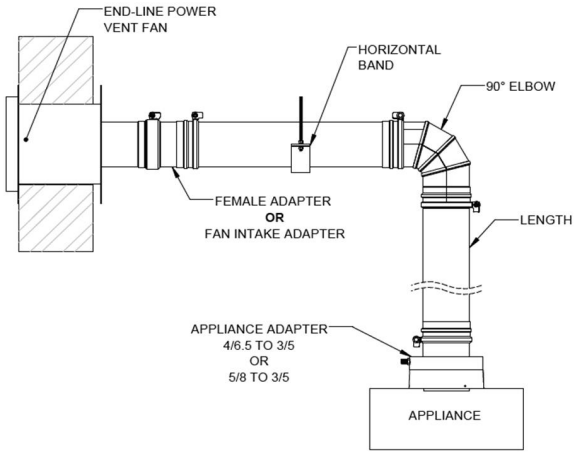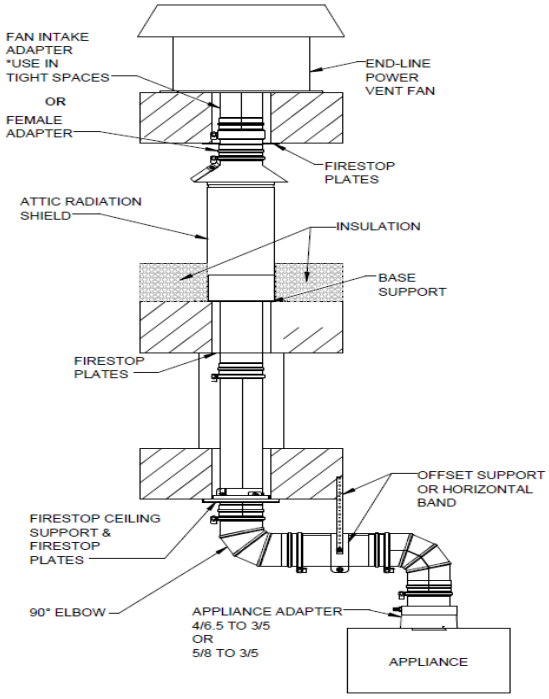
3/5 power vent typical installations